REV.NO.	REVISION DESCRIPTION	DRAWN / DATE	REVIEWED / DATE	APPROVED / DATE
	Previous versions omitted			
2	TYPE 4, 4X(CSA) added.	KCH/20200214	JCS/20200214	KTJ/20200214
3	Drawing updated	KCH/20250117	JCS/20250117	KTJ/20250117

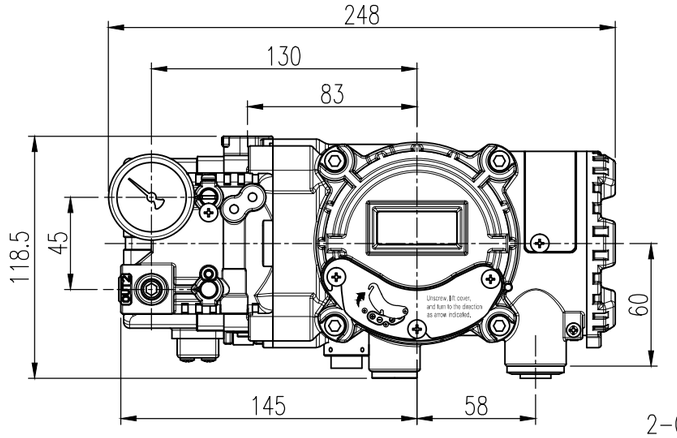

No.	Part name	Material	Q'ty	Remark
5	Pilot cover	ALDC12	1	
4	Manifold	ALDC12	1	
3	Terminal cover	ALDC12	1	
2	Base cover	ALDC12	1	
1	Base body	ALDC12	1	

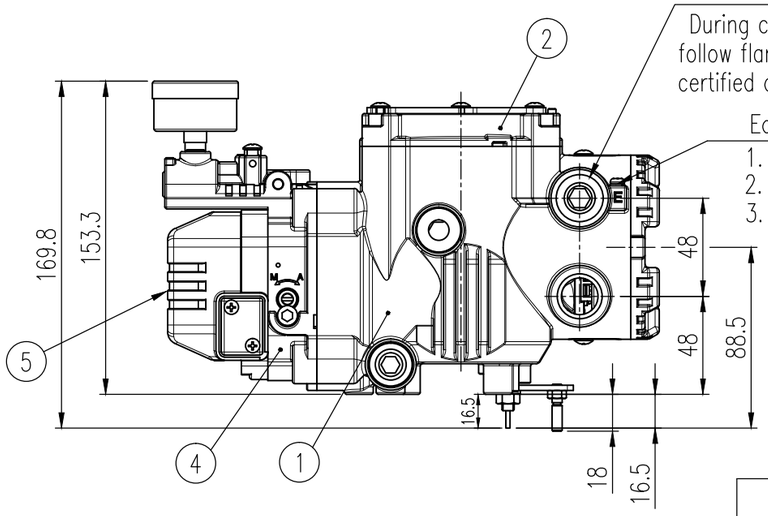

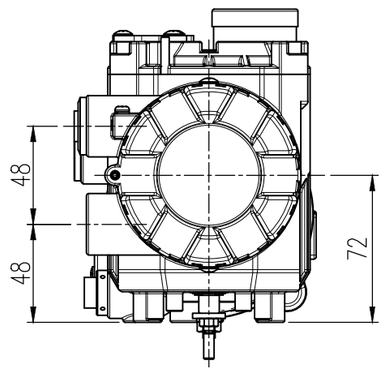

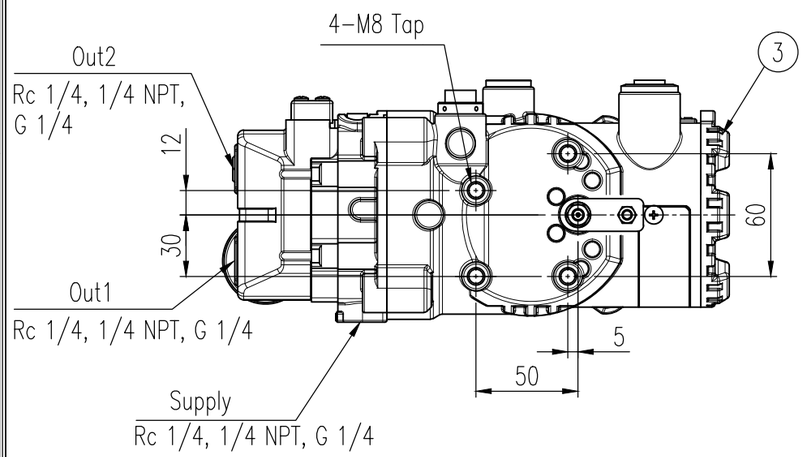

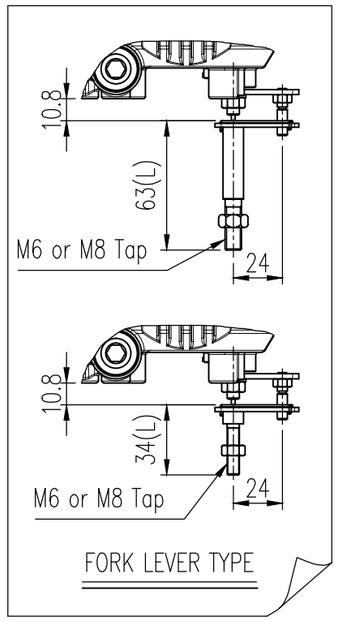

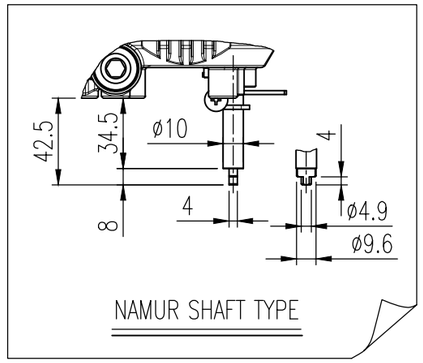

Specifications

Acting Type	☐ Single ☐ Double	
Input Signal	4–20 mA DC	
Minimum Current Signal	3.6 mA (Standard), 3.7 mA (Analog Output), 3.8 mA (HART or HART+Analog Output)	
Impedance	Max. 450 Ohm/20mA DC	
Supply Pressure	0.14 to 0.7MPa (1.4 to 7bar)	
Explosion Protection	☐ Ex d IIC T6/T5 ... ☐ Non-Explsion proof	
Stroke	55 to 110°	
Operating Temp.	☐ -30 to 85 °C (-22 to 185 °F) ☐ -40 to 85 °C (-40 to 185 °F) ☐ -55 to 85 °C (-67 to 185 °F) : Only Non-Explosion	
Ambient Temp. of Explosion proof	NEPSI, ATEX, IECEx FM, CSA, INMETRO ...	T6 : -40 to 70 °C (-40 to 158 °F) T5 : -40 to 80 °C (-40 to 176 °F)
	KCs	T6 : -40 to 70 °C (-40 to 158 °F) T5 : -40 to 85 °C (-40 to 185°F)
Linearity	± 0.5 % F.S.	
Hysteresis	± 0.5 % F.S.	
Sensitivity	± 0.2 % F.S.	
Repeatability	± 0.3 % F.S.	
Conduit entry, Air Connection	☐ G 1/2, Rc 1/4 ☐ G 1/2, 1/4 NPT ☐ G 1/2, G 1/4 ☐ M20xP1.5, 1/4 NPT ☐ 1/2 NPT, 1/4 NPT	
Gauge Connection	1/8 NPT	
Air consumption	Below 2 LPM (Sup. = 0.14 MPa, 1.4 bar)	
Flow Capacity	70 LPM (Sup. = 0.14 MPa, 1.4 bar)	
Ingress Protection	TYPE 4, 4X(CSA), IP66, (excluding the pressure gauges)	
Main Board	MPU	16 bit Micro Controller
	A/D Converter	12 bit
	D/A Converter	12 bit
Output Characteristics	Linear, EQ%, Quick Open, User set	
Communication	☐ None ☐ HART Communication (HART 7) ☐ HART with Enhanced Diagnostics & DI / DO	
Option	☐ None ☐ 4-20 mA Analog Output ☐ Limit Switch(2ea) ☐ 4-20 mA Analog Output + Limit Switch(2ea) 4)	
Housing Material	Aluminum	
Weight	3.4 kg (7.5 lb)	
Feedback connection type	☐ M6x34L ☐ M6x63L ☐ NAMUR ☐ M8x34L ☐ M8x34L	

PROJECT NAME	–		
SURFACE TEXTURE	–	PRODUCT NAME	Smart positioner
FINISH TREATMENT	–	MODEL	YT-3400
MATERIAL	–	PROJECTION	3rd
		SCALE	1 / 3
OTHERWISE NOTE	–	GENERAL TOLERANCE	–
QUANTITY	1	SHEET No.	1 / 1

rotork Rotork YTC Limited GIMPO-SI, KOREA

TITLE: Rotary

DRAWING NO.: YT-3400R-01

REV.: 3

2019.01.23

Rotork YTC-A3