REV.NO.	REVISION DESCRIPTION	DRAWN / DATE	REVIEWED / DATE	APPROVED / DATE
0	First issued	JCS/20180222		
1	Company name changed ...	KSH/20190924	KCH/20190924	KTJ/20190924
2	Range display changed	KCH/20241220	JCS/20241220	KTJ/20241220

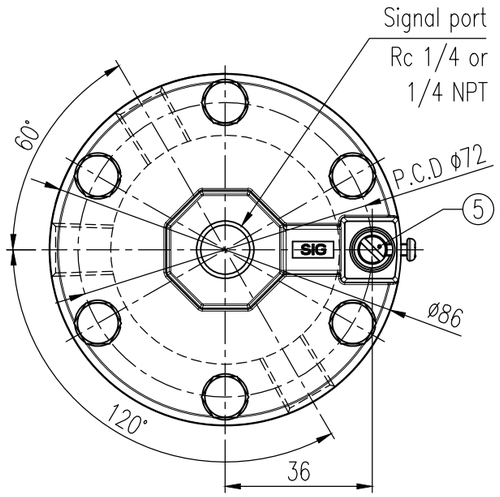

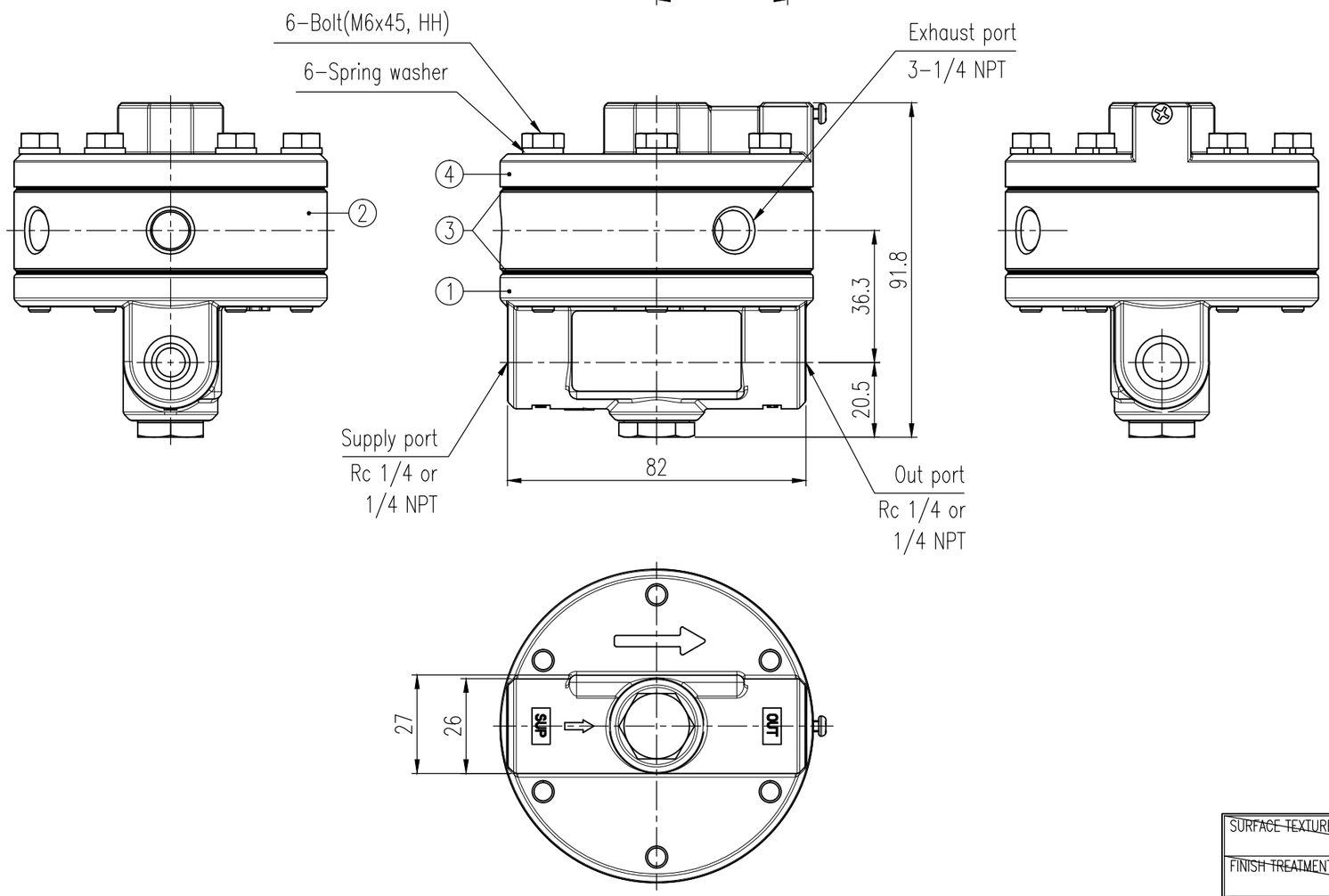

Specification

Item		Description
Max. Supply Pressure		1 MPa (10 bar)
Max. Signal/Output Pressure		0.7 MPa (7 bar)
Signal/Output Pressure Ratio		1 : 1
Flow Capacity(Cv)	Exhaust	1.32
	Output	1.19
Supply/Output Connection, Signal Connection		☐ Rc 1/4 ☐ 1/4 NPT
Exhaust Connection		1/4 NPT (3 points)
Linearity		± 1 % F.S.
Ambient Temperature	Standard	☐ −20 to 70 °C (−4 to 158 °F)
	High	☐ −20 to 120 °C (−4 to 248 °F)
	Low	☐ −40 to 70 °C (−40 to 158 °F)
	Arctic	☐ −60 to 70 °C (−76 to 158 °F)
Housing Material		Aluminum
Weight		0.55 kg (1.2 lb)

No.	Part name	Material	Q'ty	Remark
1	Adjust bolt	STS303	1	
2	Base cover	ALDC12	1	
3	Diaphragm	NBR	2	Standard
		Silicone	2	High/Low/Arctic Temp.
4	Exhaust ring	A6061	1	
5	Base body	ALDC12	1	

PROJECT NAME –

SURFACE TEXTURE	PRODUCT NAME Volume booster	rotork Rotork YTC Limited GIMPO-SI, KOREA	
FINISH TREATMENT	MODEL YT-300	TITLE Tapped Exhaust type	
MATERIAL	PROJECTION 3rd / SCALE 1 / 1.5		
OTHERWISE NOTE / GENERAL TOLERANCE	QUANTITY 1 / SHEET No. 1 / 1	DRAWING NO. YT-300-02	REV. 2

2019.01.23

Rotork YTC-A3