NO	PART NAME	MATERIAL	Q'TY	REMARK
1	WINDOW	SM45C	1	
2	TOP COVER	ADC12	1	
3	BODY	ADC12	1	
4	LEVER	SM45C	1	
5	INSERT	FC0208	1	

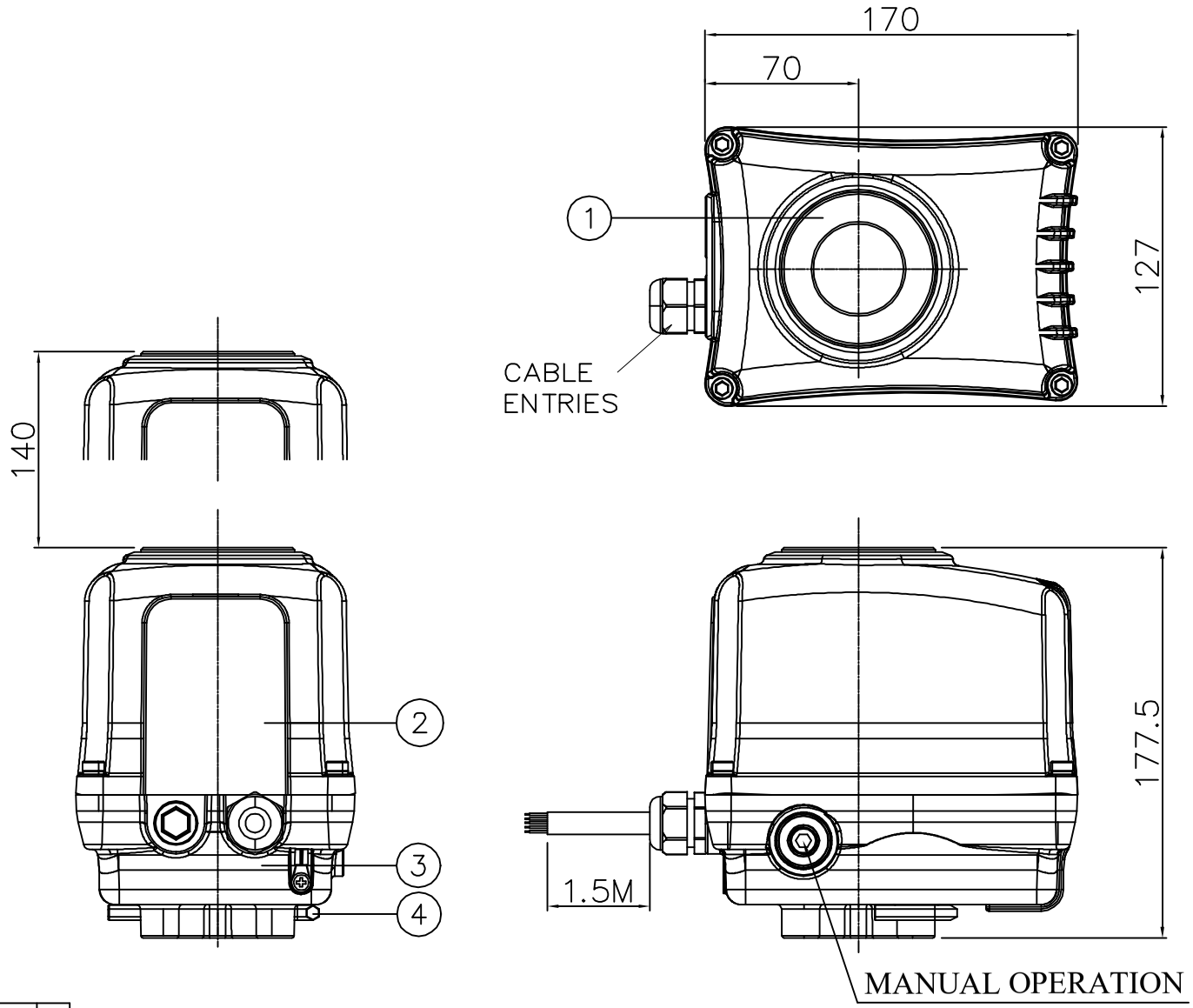

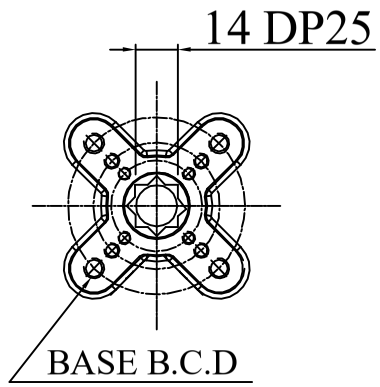

ISO 5211 F03(ø36 M5TAP DP9)
ISO 5211 F05(ø50 M6TAP DP11)
ISO 5211 F07(ø70 M8TAP DP13)

DRIVE INSERT

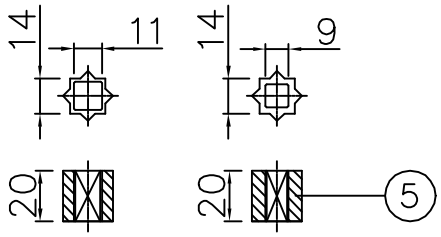

SA009L	1
SA005L	1
APPLICATION	

DRAW	M.Y HWANG	PROJ.	SCALE 1/1	PART NAME	SA Super cap Flat Type Ass'y
		DIM. mm	DATE 15.05.11		
CHECK	M.Y HWANG	NOAH		DWG NO.	S05L-717-A
APPD		NOAH ACTUATION CO., LTD		1 OF 1 SHEET	DWG SIZE A1