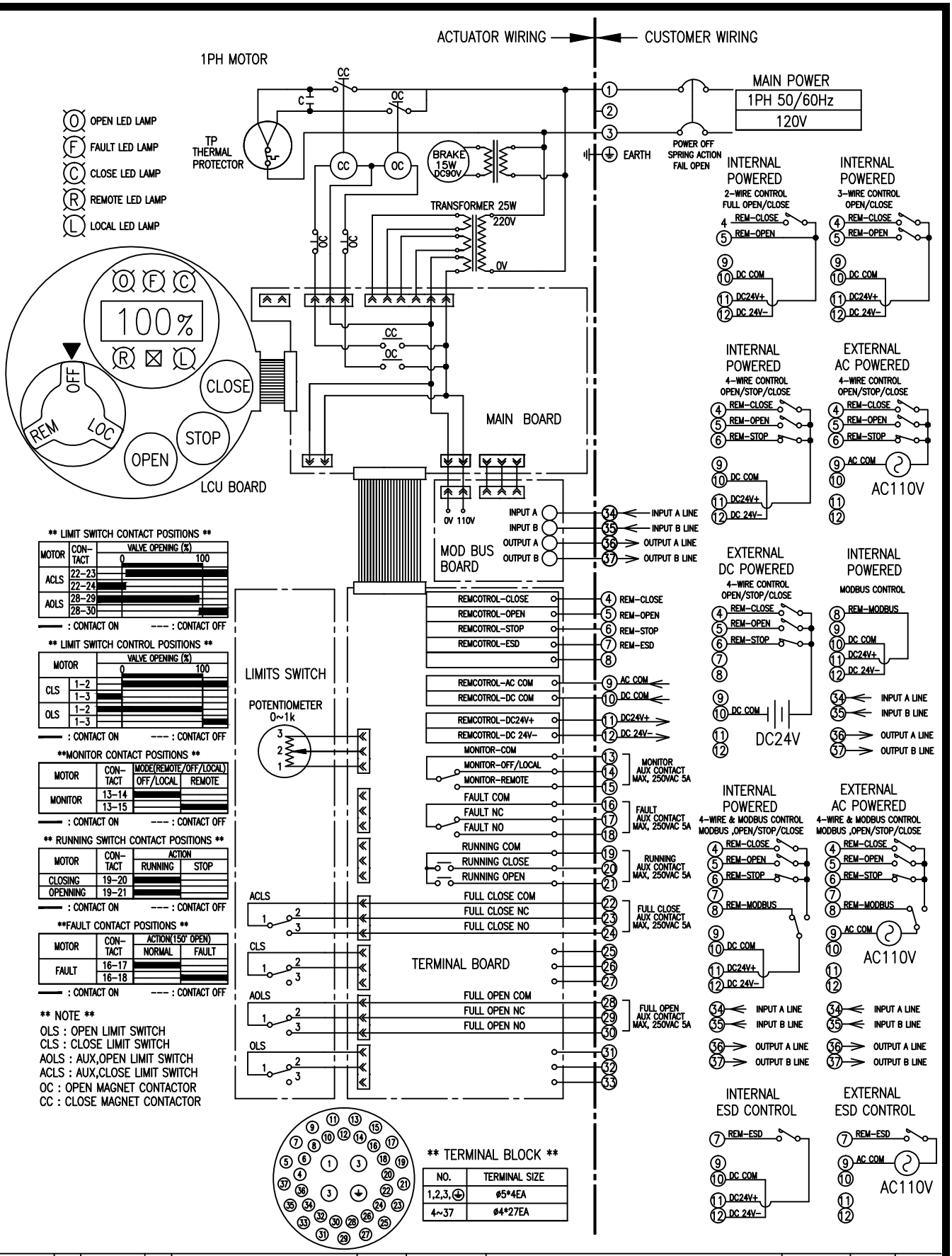

** LIMIT SWITCH CONTACT POSITIONS **

MOTOR	CON-TACT	VALVE OPENING (%) 0	100
ACLS	22-23		
	22-24		
AOLS	28-29		
	28-30		

—— : CONTACT ON --- : CONTACT OFF

** LIMIT SWITCH CONTROL POSITIONS **

MOTOR		VALVE OPENING (%) 0	100
CLS	1-2		
	1-3		
OLS	1-2		
	1-3		

—— : CONTACT ON --- : CONTACT OFF

**MONITOR CONTACT POSITIONS **

MOTOR	CON-TACT	MODE(REMOTE/OFF/LOCAL) OFF/LOCAL	REMOTE
MONITOR	13-14		
	13-15		

—— : CONTACT ON --- : CONTACT OFF

** RUNNING SWITCH CONTACT POSITIONS **

MOTOR	CON-TACT	ACTION RUNNING	STOP
CLOSING	19-20		
OPENNING	19-21		

—— : CONTACT ON --- : CONTACT OFF

**FAULT CONTACT POSITIONS **

MOTOR	CON-TACT	ACTION(150° OPEN) NORMAL	FAULT
FAULT	16-17		
	16-18		

—— : CONTACT ON --- : CONTACT OFF

** NOTE **

OLS : OPEN LIMIT SWITCH
CLS : CLOSE LIMIT SWITCH
AOLS : AUX,OPEN LIMIT SWITCH
ACLS : AUX,CLOSE LIMIT SWITCH
OC : OPEN MAGNET CONTACTOR
CC : CLOSE MAGNET CONTACTOR

** TERMINAL BLOCK **

NO.	TERMINAL SIZE
1,2,3,⏚	ø5*4EA
4~37	ø4*27EA

				DRAW	H.S PARK	△			
SR30	1					SYM	E C N NO	CHANGES	DATE	SIGN	APPD
SR20	1			CHECK							
SR10	1			APPD		PART NAME	1PH WIRING DIAGRAM INTEGRAL MODBUS, FAIL OPEN				
SR05	1										
APPLICATION				DATE	23.03.22	DWG NO.	RUO-104M-A				