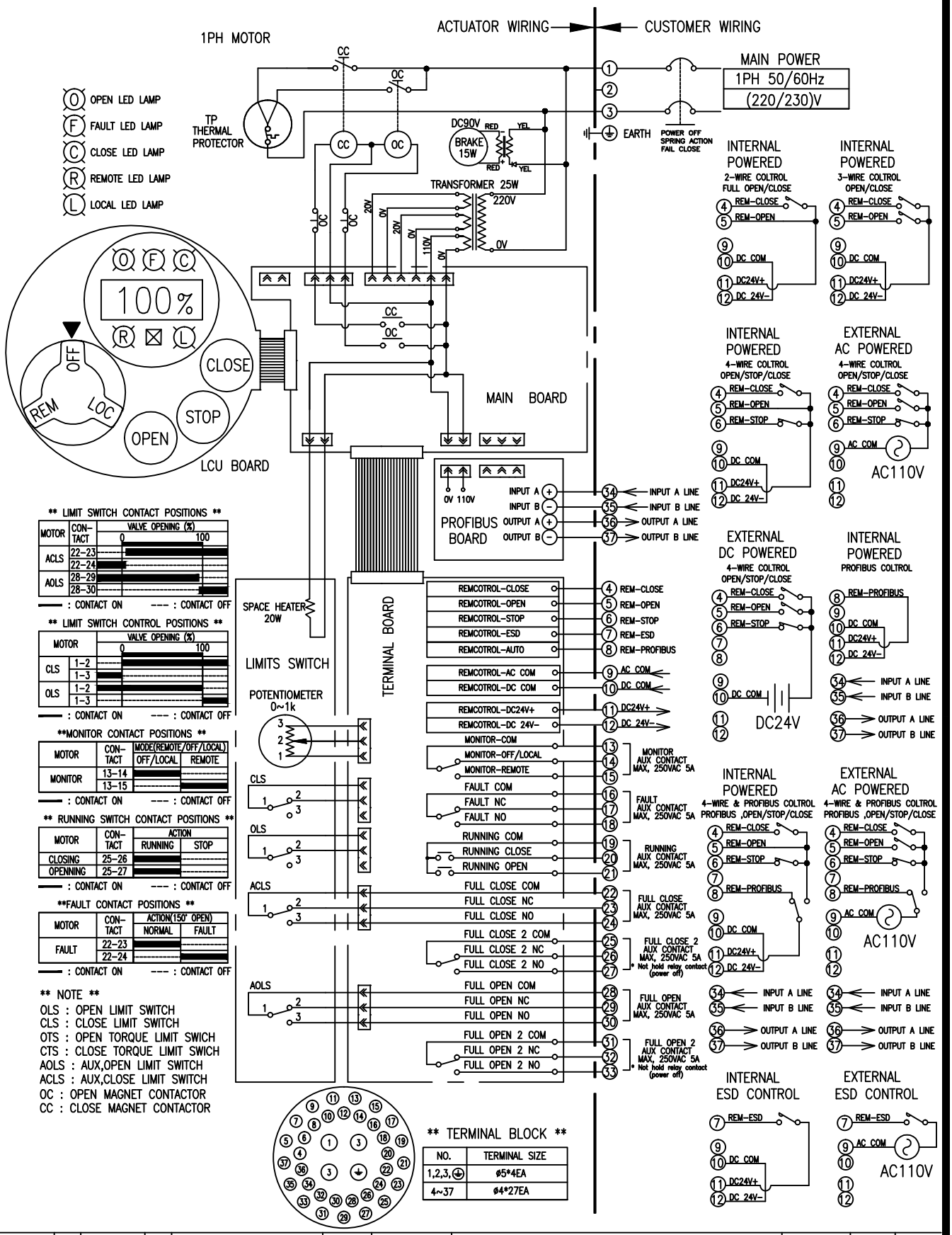

		DRAW H.S PARK	△					
SR30	1		SYM	E C N NO	CHANGES	DATE	SIGN	APPD
SR20	1	CHECK H.S PARK	PART NAME		1PH WIRING DIAGRAM INTEGRAL PROFIBUS			
SR10	1	APPD						
SR05	1							
APPLICATION		DATE 24.10.28	DWG NO.		RUC-204P-A			