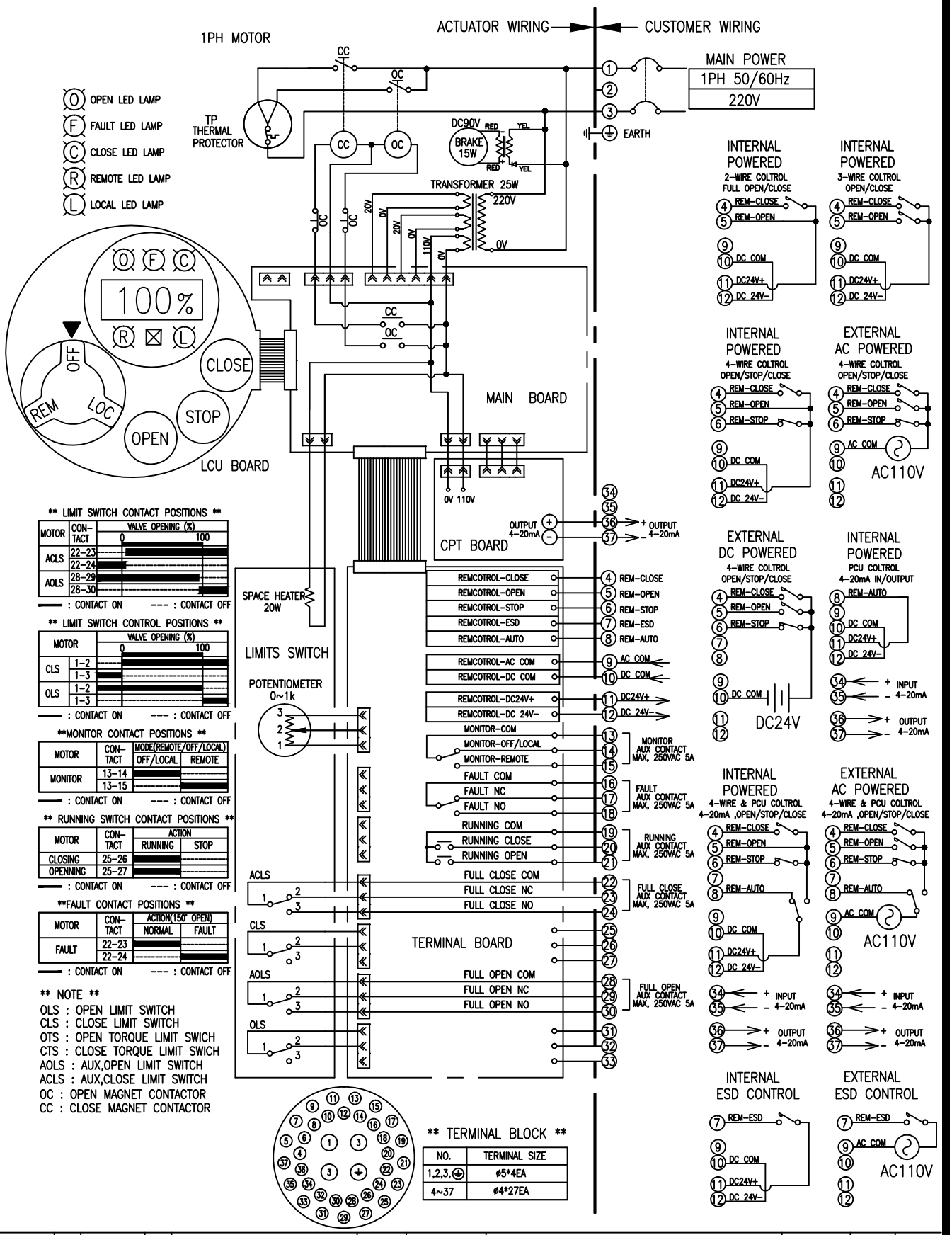

** LIMIT SWITCH CONTACT POSITIONS **

MOTOR	CON-TACT	VALVE OPENING (%) 0	100
ACLS	22-23		
	22-24		
AOLS	28-29		
	28-30		

—— : CONTACT ON --- : CONTACT OFF

** LIMIT SWITCH CONTROL POSITIONS **

MOTOR		VALVE OPENING (%) 0	100
CLS	1-2		
	1-3		
OLS	1-2		
	1-3		

—— : CONTACT ON --- : CONTACT OFF

**MONITOR CONTACT POSITIONS **

MOTOR	CON-TACT	MODE(REMOTE/OFF/LOCAL) OFF/LOCAL	REMOTE
MONITOR	13-14		
	13-15		

—— : CONTACT ON --- : CONTACT OFF

** RUNNING SWITCH CONTACT POSITIONS **

MOTOR	CON-TACT	ACTION RUNNING	STOP
CLOSING	25-26		
OPENNING	25-27		

—— : CONTACT ON --- : CONTACT OFF

**FAULT CONTACT POSITIONS **

MOTOR	CON-TACT	ACTION(150° OPEN) NORMAL	FAULT
FAULT	22-23		
	22-24		

—— : CONTACT ON --- : CONTACT OFF

** NOTE **

OLS : OPEN LIMIT SWITCH
CLS : CLOSE LIMIT SWITCH
OTS : OPEN TORQUE LIMIT SWICH
CTS : CLOSE TORQUE LIMIT SWICH
AOLS : AUX,OPEN LIMIT SWITCH
ACLS : AUX,CLOSE LIMIT SWITCH
OC : OPEN MAGNET CONTACTOR
CC : CLOSE MAGNET CONTACTOR

** TERMINAL BLOCK **

NO.	TERMINAL SIZE
1,2,3,⏚	ø5*4EA
4~37	ø4*27EA

1		DRAW H.S PARK	△					
1			SYM	E C N NO	CHANGES	DATE	SIGN	APPD
1		CHECK						
SR10 1		APPD	PART NAME		1PH WIRING DIAGRAM INTEGRAL CPT, FAIL CLOSE			
SR05 1								
APPLICATION		DATE 25.07.01	DWG NO.		RUC-202-A			