| INPUT FLANGE DETAILS | | | | | | | MOUNTING HOLES - BOLT CIRCLE (OFF CENTRES) | | | | STEM ACCEPTANCE IN ACCORDANCE TO STANDARD | | | | | | |
|---|---|---|---|---|---|---|---|---|---|---|---|---|---|---|---|---|---|
| INPUT FLANGE | FLANGE O/DIA. | SHAFT DIA. | RECESS DIA. | RECESS DEPTH | HOLE DETAILS (OFF CENTRES) | KEY DETAILS | ISO 5211 / MSS SP-101 MOUNTING OPTION | HOLE DETAILS (OFF CENTRES) | MAX OUTSIDE DIA. INCLUDING DRILLED HOLES | MIN INSIDE DIA. INCLUDING DRILLED HOLES | SQ BORE MAX | STANDARD | MIN BORE | SQ KEY MAX BORE | SQ KEY SIZE | RECT. KEY MAX BORE | RECT KEY SIZE |
| ISO F10 | Ø125 x 20 (Ø4.92" x 0.787") | Ø30.00-0.05 (Ø1.181"-0.002") | Ø70.05+0.15 (Ø2.758"+0.006") | 4 (0.16") | 4 x Ø10.5 ON Ø102.0 P.C. (4 x Ø0.41" ON Ø4.02" P.C.) | 8x7x55 (0.31"x0.27"x2.16") | ISO F40* | 8 x M36 x 36 (1.42") DEEP ON Ø406.0 (Ø15.98") P.C. | Ø544 (21.42") | Ø361 (14.2") | □ 189.5 (7.46") | BS4235 | - | - | - | 270.0 | 63 x 32 |
| | | | | | | | | | | | | BS46 | - | - | - | 10" | 2 1/2" x 1 7/8" |
| FA10 | | | Ø58.70+0.15 (Ø2.311"+0.006") | | | | FA40* | 8 x 1.25" UNC x 36 (1.42") DEEP ON Ø406.4 (Ø16.00") P.C. | | | | ANSI B17.1 | - | 9.4" | 2 1/2" SQ. | 10.125" | 2 1/2" x 1 3/4" |
| | | | | | | | | | | | | DIN 6885 | - | - | - | 270.0 | 63 x 32 |

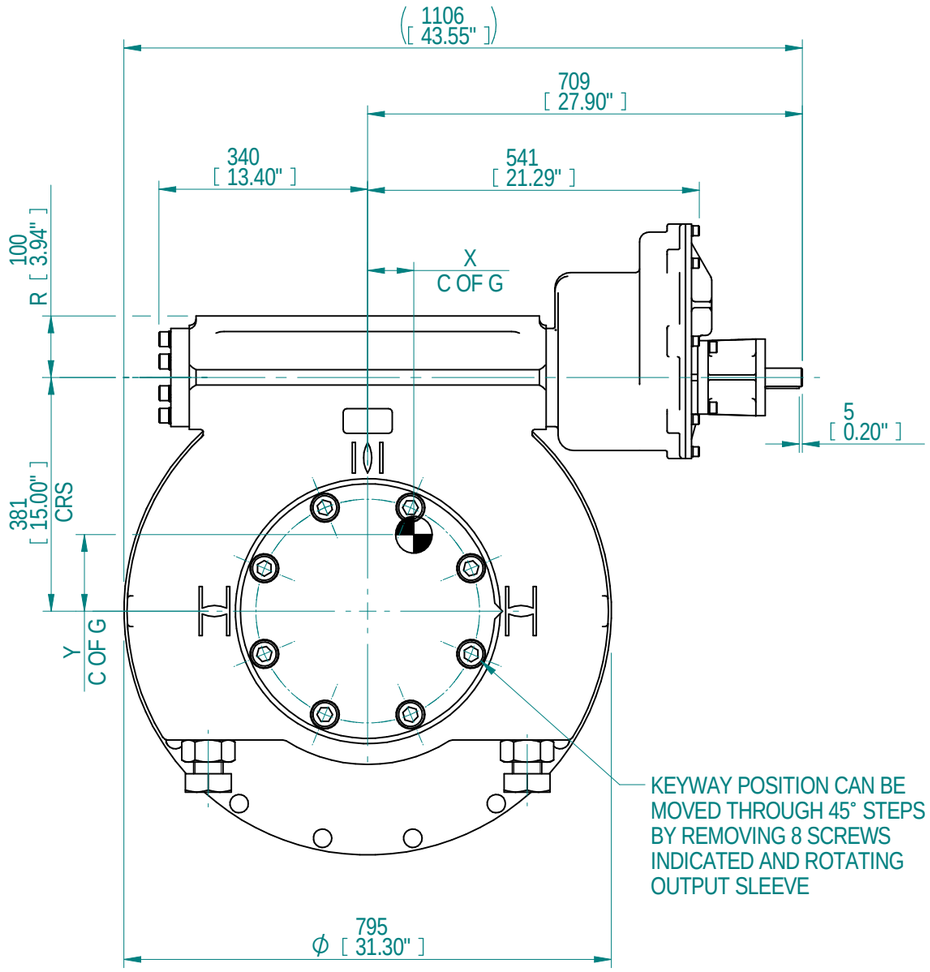


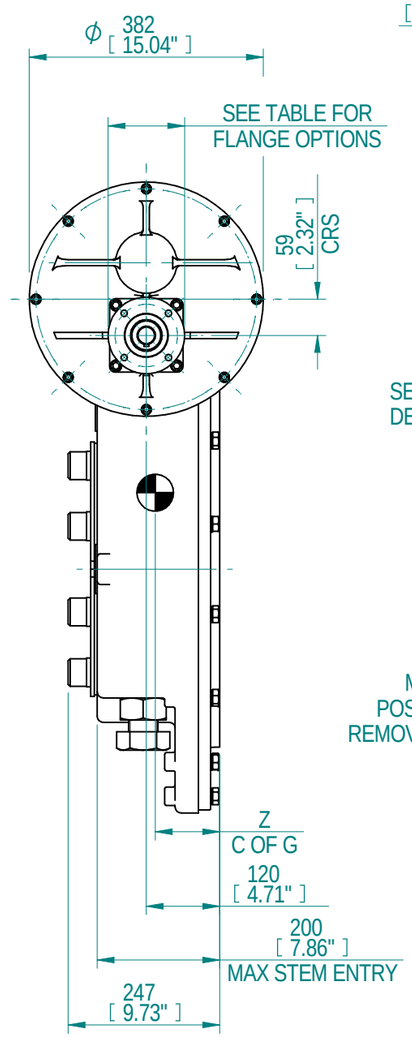


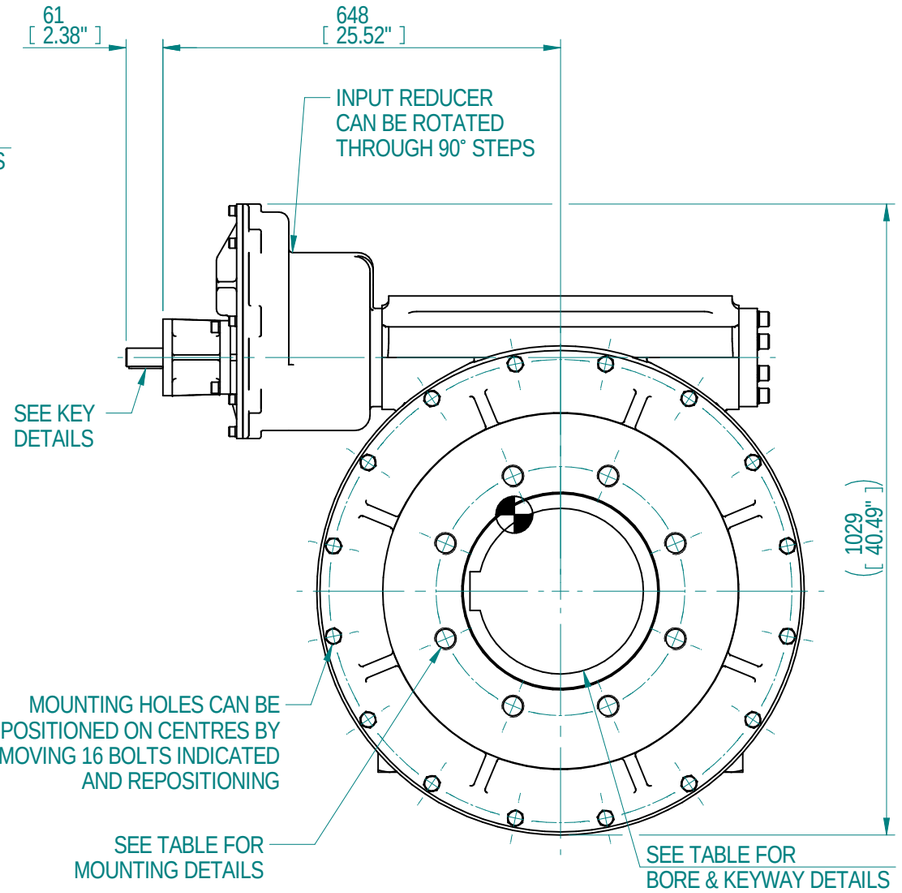


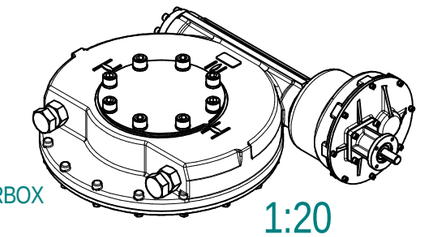

1:20

PLAN VIEW OF GEARBOX IN CLOSED POSITION SHOWING STANDARD KEYWAY POSITIONS. ALTERNATIVES AVAILABLE ON REQUEST

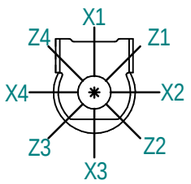


| RATIO | TURNS TO CLOSE | M.A. (±10%) | WEIGHT (KG) | MAX OUTPUT (Nm) | MAX INPUT (Nm) | X | Y | Z |
|---|---|---|---|---|---|---|---|---|
| 1093 | 273 | 352 | 485 | 141000 | 401 | 75 | 125 | 105 |
| 919 | 230 | 296 | | | 477 | | | |
| 785 | 196 | 253 | | | 558 | | | |
| 680 | 170 | 219 | | | 644 | | | |
| 595 | 149 | 191 | | | 737 | | | |
| 439 | 110 | 141 | | | 989 | | | |
| DESCRIPTION | | | | TORQUE | | CENTRE OF GRAVITY | | |

NOTES:
1. OTHER INPUT AND OUTPUT OPTIONS AVAILABLE - SEE 'IW GEARBOX BROCHURE' AT WWW.ROTORK.COM FOR FURTHER DETAILS.
2. * THREAD DEPTH DOES NOT MATCH ISO STANDARD.
3. CENTRE OF GRAVITY POSITION IS INDICATIVE FOR STANDARD BUILD WHEN IN POSITION SHOWN.
4. WEIGHT AND C OF G DIMENSIONS WILL VARY +/-1% DEPENDING ON RATIO.

AS PART OF CONTINUOUS PRODUCT DEVELOPMENT, ALL DETAILS SUBJECT TO CHANGE WITHOUT PRIOR NOTICE. FOR UP TO DATE DETAILS PLEASE VISIT www.rotork.com

| Rev | ECN | Revised | Rev. Approved | Date | Change Description |
|---|---|---|---|---|---|
| 0-0 | | J.Forshaw | S.Telukuntla | 2025-06-27 | First issue |

rotork® Gears
Leeds - UK
www.rotork.com

©2025 Rotork Group of Companies. All rights reserved. This document and its contents may not be reproduced, distributed, transmitted, displayed, published, or broadcast, in whole, or in part, without the prior, express written permission of Rotork Group of Companies.

Dimensions in mm
Scale 1:10

Title **IW116 IR35 QUARTER TURN GEARBOX**

| | | |
|---|---|---|
| Created | J.Forshaw | 2025-06-17 |
| Checked | | |
| Approved | S.Telukuntla | 2025-06-27 |

Drawing Number **PUB-IW116-MK2-IR35** Rev 0-0
Nominal Mass **SEE TABLE** Size A3 Sheet 1 of 1

Template Issue : 2018-05-10