INPUT FLANGE DETAILS							MOUNTING HOLES - BOLT CIRCLE (OFF CENTRES)				STEM ACCEPTANCE IN ACCORDANCE TO STANDARD						
INPUT FLANGE	FLANGE O/DIA.	SHAFT DIA.	RECESS DIA.	RECESS DEPTH	HOLE DETAILS (OFF CENTRES)	KEY DETAILS	ISO 5211 / MSS SP-101 MOUNTING OPTION	HOLE DETAILS (OFF CENTRES)	MAX OUTSIDE DIA. INCLUDING DRILLED HOLES	MIN INSIDE DIA. INCLUDING DRILLED HOLES	SQ BORE MAX	STANDARD	MIN BORE	SQ KEY MAX BORE	SQ KEY SIZE	RECT. KEY MAX BORE	RECT KEY SIZE
ISO F10	Ø125 x 15 (Ø4.92" x 0.59")	Ø20.00-0.05 (Ø0.787"-0.002")	Ø70.05+0.15 (Ø2.758"+0.006")	4 (0.16")	4 x Ø10.5 ON Ø102.0 P.C. (4 x Ø0.41" ON Ø4.02" P.C.)	6x6x40 (0.24"x0.24"x1.57")	ISO F40*	8 x M36 x 36 (1.42") DEEP ON Ø406.0 (Ø15.98") P.C.	Ø544 (21.42")	Ø361 (14.2")	□ 189.5 (7.46")	BS4235	-	-	-	270.0	63 x 32
												BS46	-	-	-	10"	2 1/2" x 1 7/8"
FA10			Ø58.70+0.15 (Ø2.311"+0.006")				FA40*	8 x 1.25" UNC x 36 (1.42") DEEP ON Ø406.4 (Ø16.00") P.C.				ANSI B17.1	-	9.4"	2 1/2" SQ.	10.125"	2 1/2" x 1 3/4"
												DIN 6885	-	-	-	270.0	63 x 32

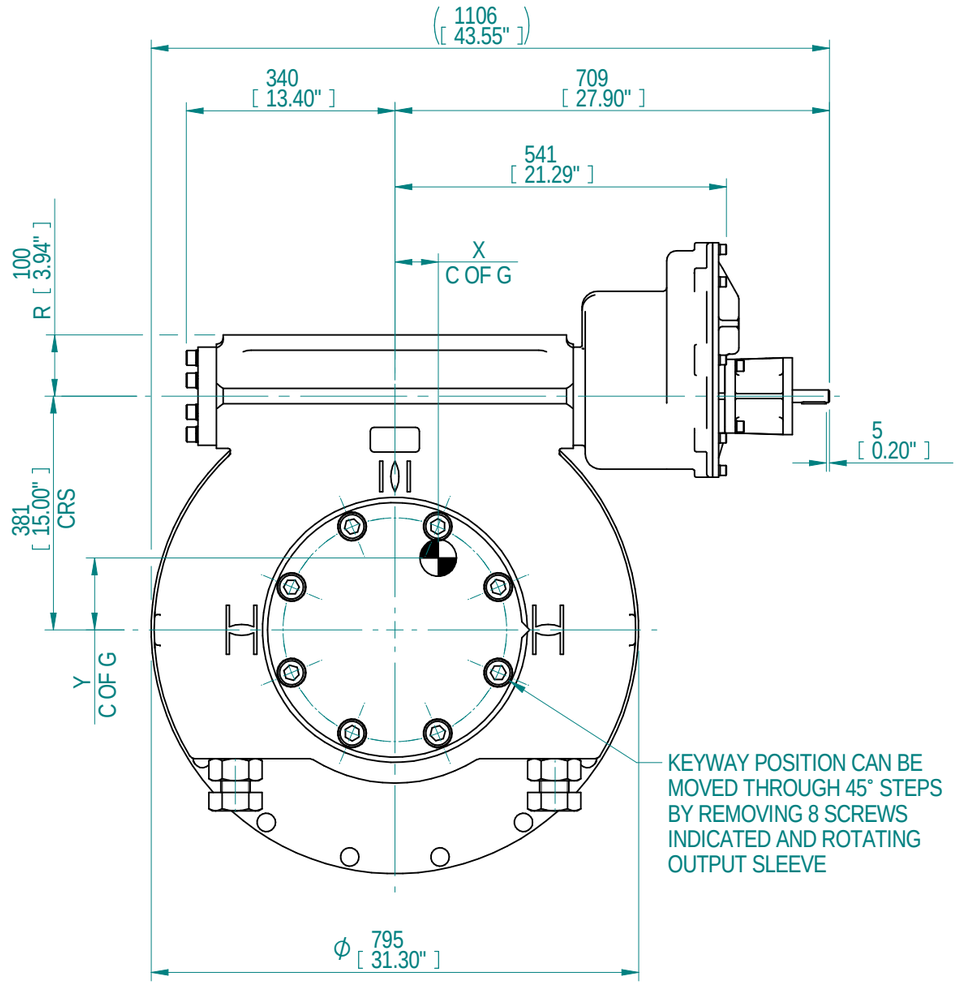

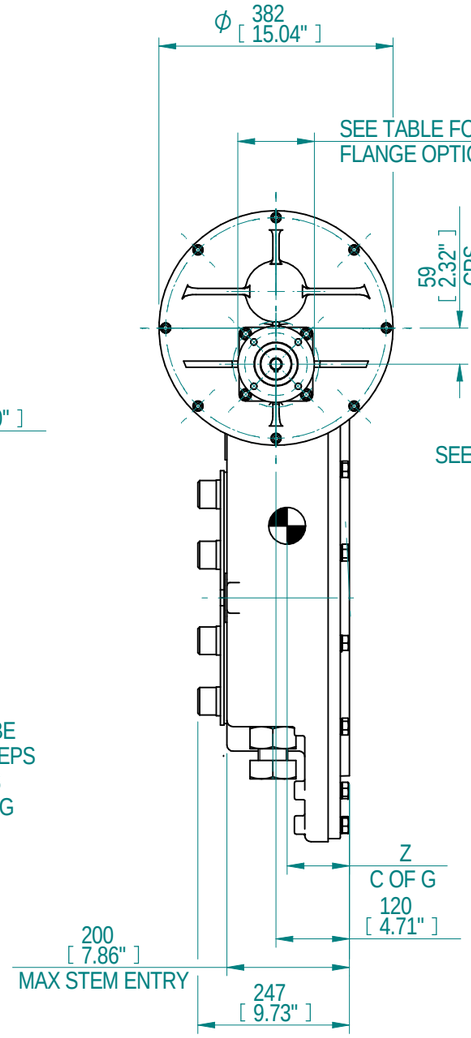

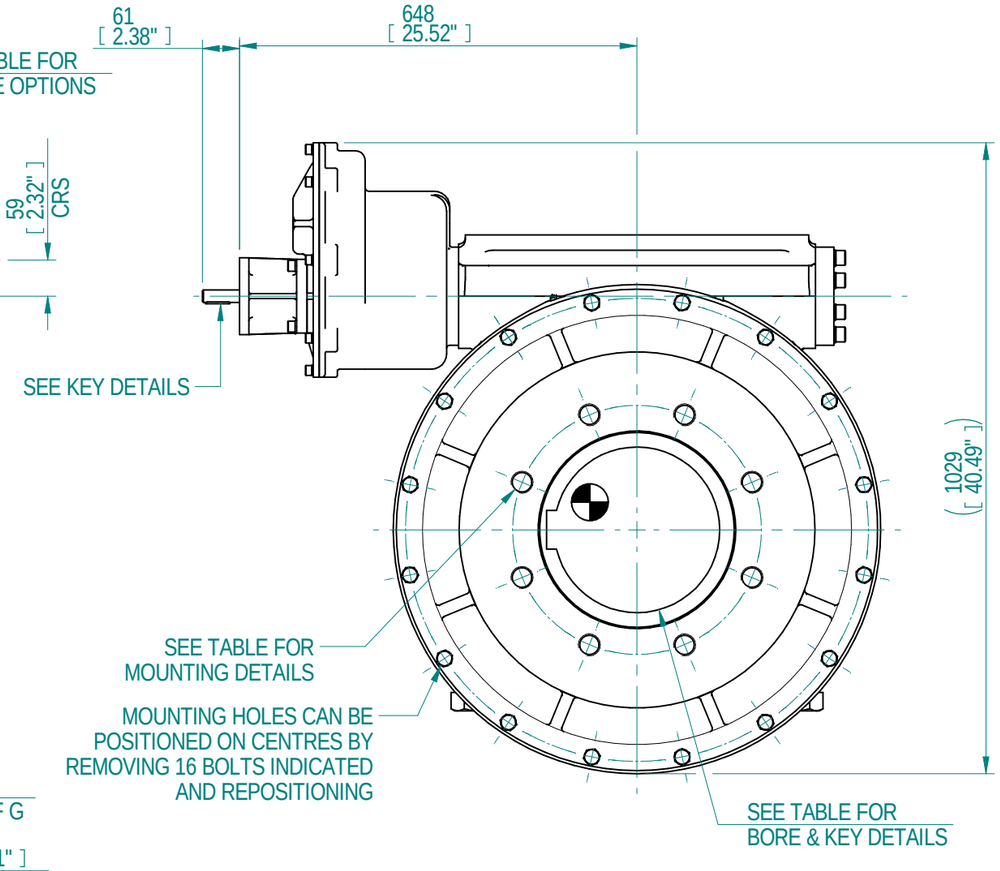

PLAN VIEW OF GEARBOX IN CLOSED POSITION SHOWING STANDARD KEYWAY POSITIONS. ALTERNATIVES AVAILABLE ON REQUEST

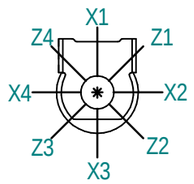

RATIO	TURNS TO CLOSE	M.A. (±10%)	WEIGHT (KG)	MAX OUTPUT (Nm)	MAX INPUT (Nm)	X	Y	Z
896	224	288	499	108464	376	70	117	102
657	164	211			513			
438	110	141			770			
299	75	96			1129			
219	55	70			1539			
DESCRIPTION				TORQUE		CENTRE OF GRAVITY		

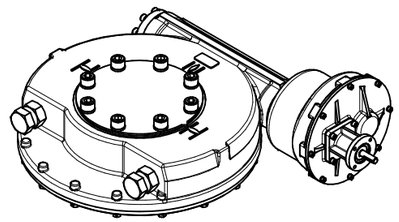

1:20

NOTES:
1. OTHER INPUT AND OUTPUT OPTIONS AVAILABLE - SEE 'IW GEARBOX BROCHURE' AT WWW.ROTORK.COM FOR FURTHER DETAILS.
2. CENTRE OF GRAVITY POSITION IS INDICATIVE FOR STANDARD BUILD WHEN IN POSITION SHOWN.
3. * THREAD DEPTH DOES NOT MATCH ISO STANDARD.
4. WEIGHT AND C OF G DIMENSIONS WILL VARY +/-1% DEPENDING ON RATIO.

Rev	ECN	Revised	Rev. Approved	Date	Change Description
0-0	EC1622	J.Forshaw	S.Telukuntla	2025-06-27	First issue

AS PART OF CONTINUOUS PRODUCT DEVELOPMENT, ALL DETAILS SUBJECT TO CHANGE WITHOUT PRIOR NOTICE. FOR UP TO DATE DETAILS PLEASE VISIT www.rotork.com

rotork® Gears
Leeds - UK
www.rotork.com

©2025 Rotork Group of Companies. All rights reserved. This document and its contents may not be reproduced, distributed, transmitted, displayed, published, or broadcast, in whole, or in part, without the prior, express written permission of Rotork Group of Companies.

Dimensions in mm
Scale 1:10

Title IW11 IR3-1 QUARTER TURN GEARBOX

Created	J.Forshaw	2025-03-14
Checked	S.Telukuntla	2025-06-26
Approved	S.Telukuntla	2025-06-27

Drawing Number PUB-IW11-MK2-IR3-1
Rev 0-0
Nominal Mass SEE TABLE
Size A3
Sheet 1 of 1

Template Issue : 2018-05-10