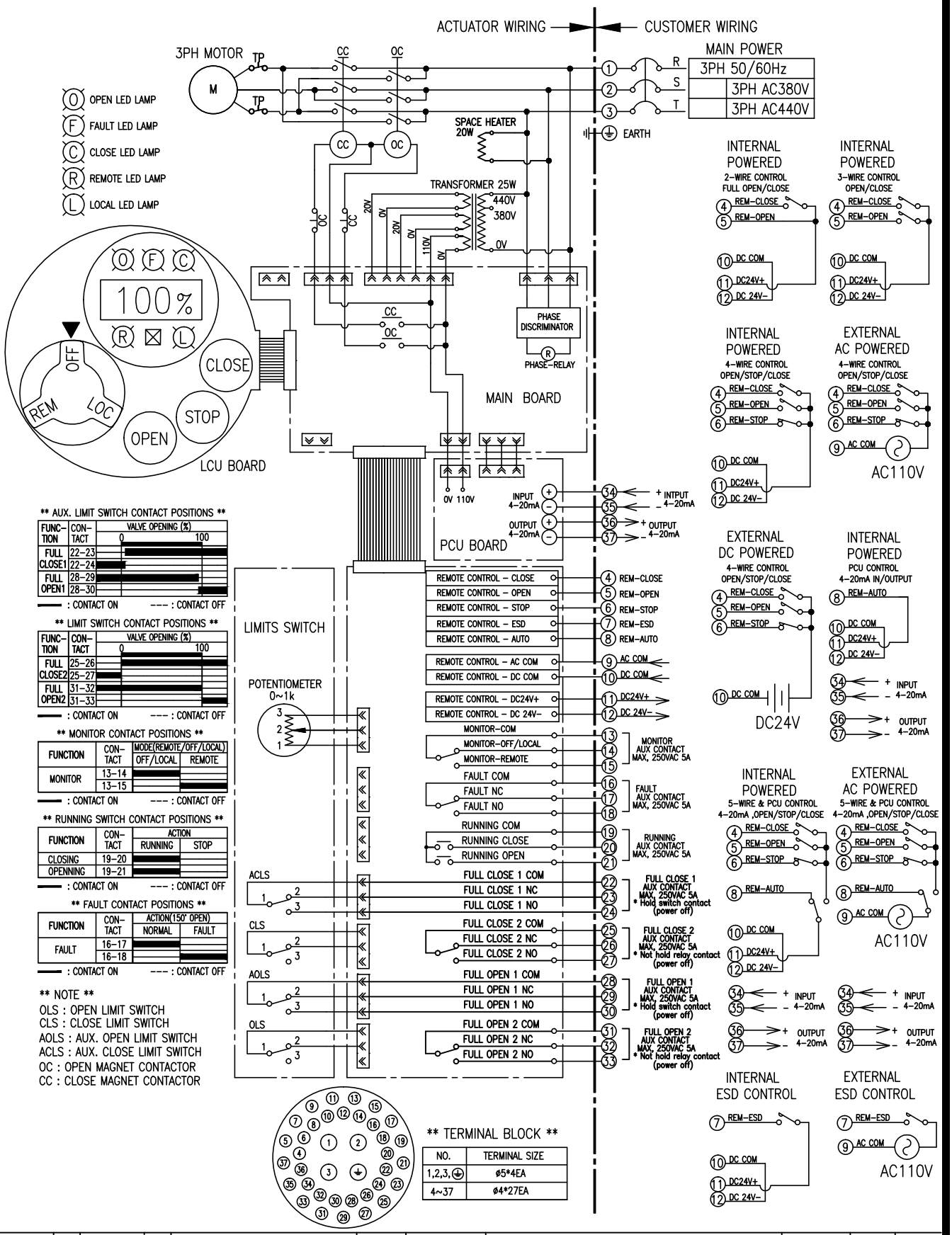

				DRAW	K.H. OH	△			
				CHECK	K.H. OH	SYM	E C N NO	CHANGES	DATE	SIGN	APPD
A009	1			APPD	M.Y. HWANG	PART NAME	3PH WIRING DIAGRAM INTEGRAL PCU				
A006	1			DATE	22.10.11.	DWG NO.	NU-303-B				
APPLICATION											