NO	PART NAME	MATERIAL	Q'TY	REMARK
1	WINDOW	TEMPERED GLASS	1	
2	TOP COVER	AC2B	1	
3	BODY	AC2B	1	
4	LEVER	SM45C	1	
5	HANDLE	AC2B	1	
6	BASE	GC25	1	
7	BUSHING	SM45C	1	
8	INTEGRAL HOUSING	ALDCS10	1	

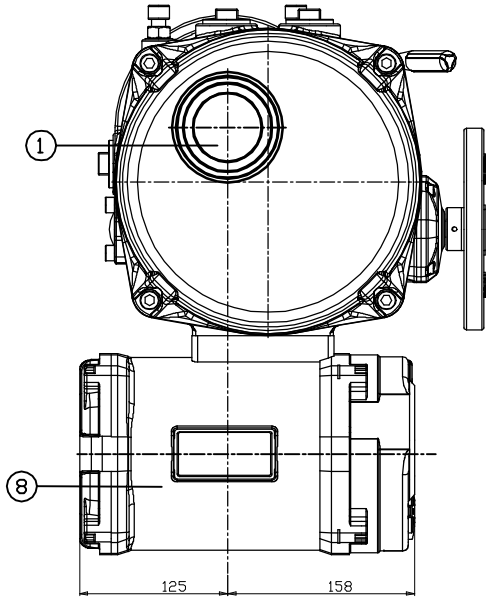

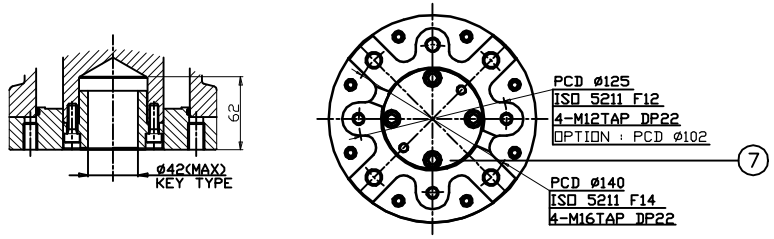

BASE & D/B

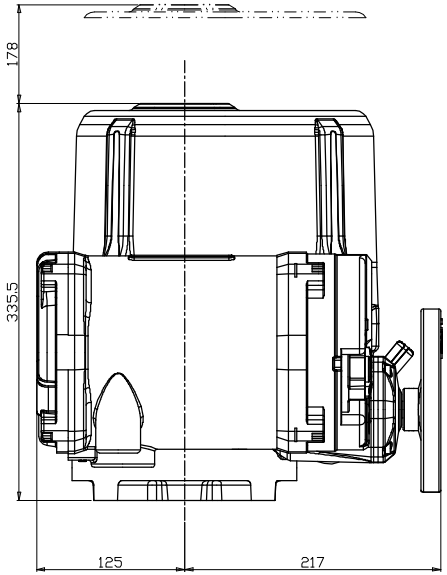

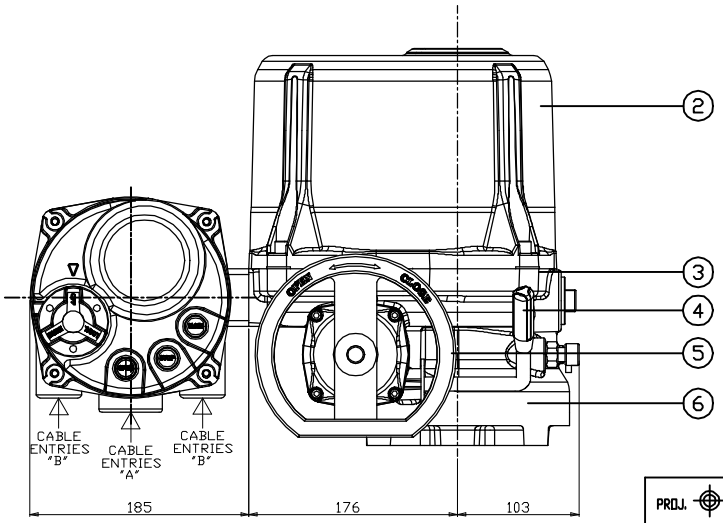

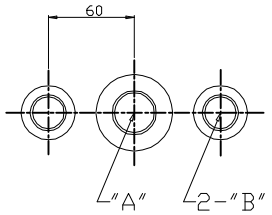

"A"	"B"
PF 1	PF3/4
M25	M20
NPT 1	NPT3/4

CABLE ENTRIES

NA120.1	1
NA100.1	1
NA080.1	1
NA060.1	1
APPLICATION	

PROJ.	SYM	E C N NO	CHANGES	DATE	SIGN	APPD
DRAW T.G KANG	SCALE 1/1	ISSU.DEPT. 연구소	PART NAME NA060,080,100,120 EXP INTEGRAL ASS'Y		
	DIM. mm	DATE 19.03.26			
CHECK M.Y HWANG	NOAH ACTUATION CO., LTD		DWG NO. N050-606-A		
APPD			1 OF 1 SHEET	DWG SIZE A0	

1189x841