NO	PART NAME	MATERIAL	Q'TY	REMARK
1	WINDOW	PC	1	
2	TOP COVER	AC2B	1	
3	BODY	AC2B	1	
4	LEVER	SM45C	1	
5	HANDLE	AC2B	1	
6	BASE	GC25	1	
7	BUSHING	SM45C	1	

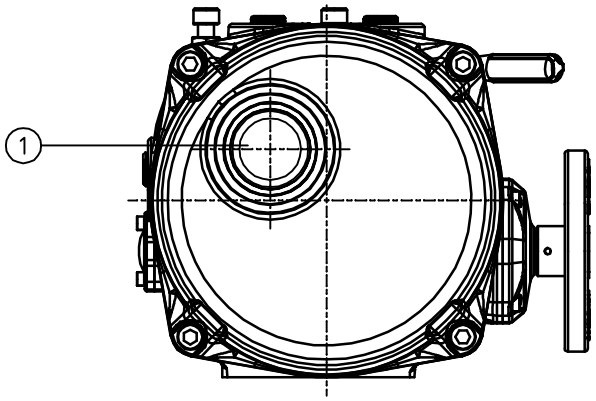

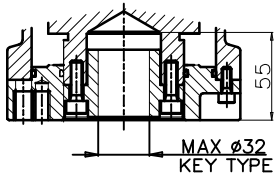

BASE & D/B

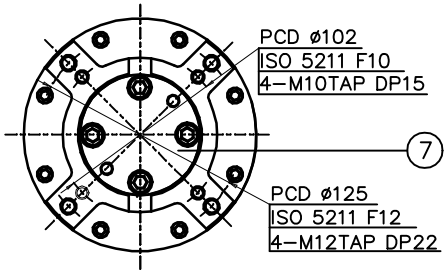

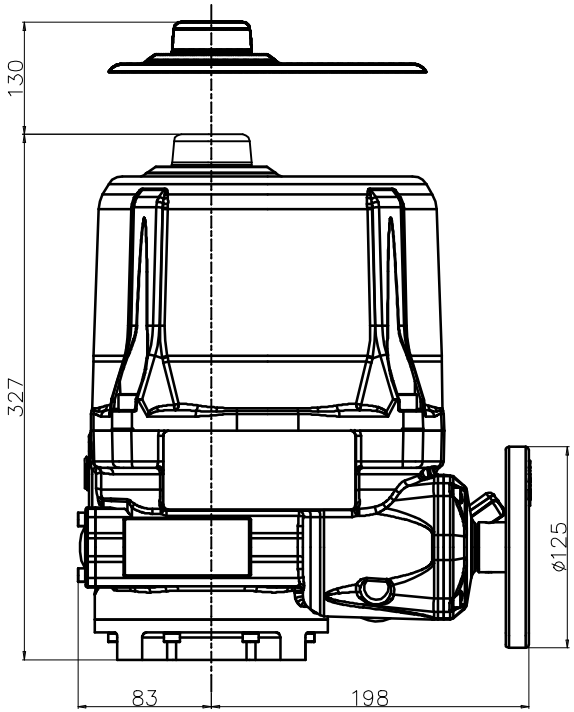

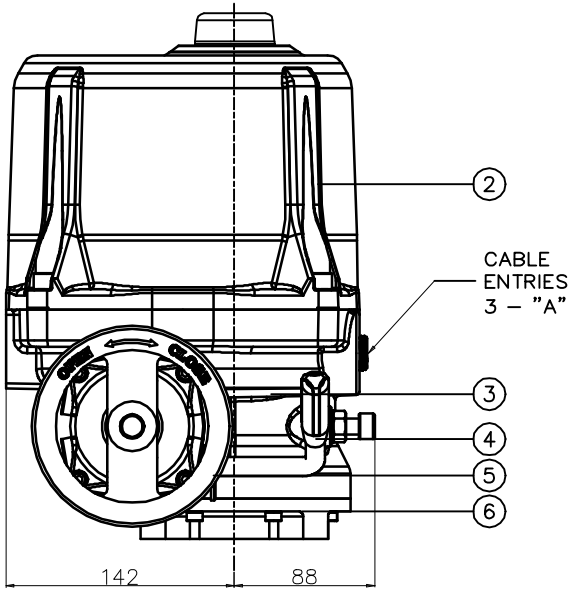

"A"
PF3/4
PF1
M20 pitch1.5
M25 pitch1.5
M32 pitch1.5
NTP3/4
NPT1

CABLE ENTRIES

NA050.1	ㄱ
NA038.1	ㄱ
NA028.1	ㄱ
APPLICATION	

PROJ.	△					
	SYM	E C N NO	CHANGES	DATE	SIGN	APPD
DRAW T.G KANG	SCALE 1/1	ISSU.DEPT. 연구소	PART NAME NA028,038,050 ASS'Y			
	DIM. mm	DATE 19.03.26				
CHECK M.Y HWANG	NOAH		DWG NO. N025-701-A			
APPD	NOAH ACTUATION CO., LTD		1 OF 1 SHEET	DWG SIZE A0		

1189x841