NO	PART NAME	MATERIAL	Q'TY	REMARK
1	WINDOW	PC	1	
2	TOP COVER	AC2B	1	
3	BODY	AC2B	1	
4	LEVER	SM45C	1	
5	HANDLE	AC2B	1	
6	BASE	GC25	1	
7	BUSHING	SM45C	1	
8	OPTION HOUSING	AC2B	1	

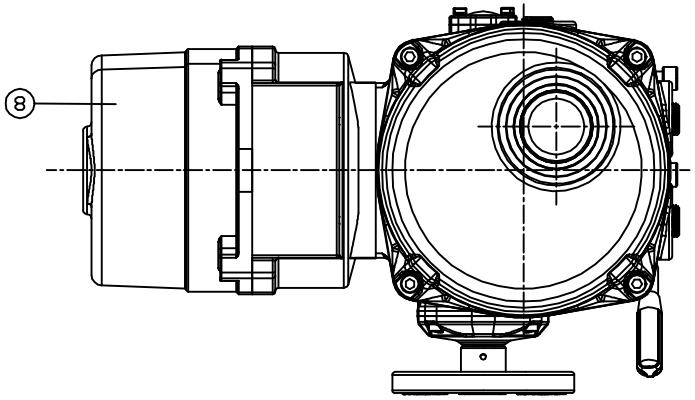

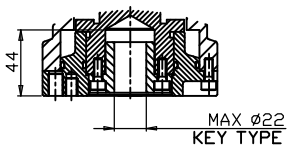

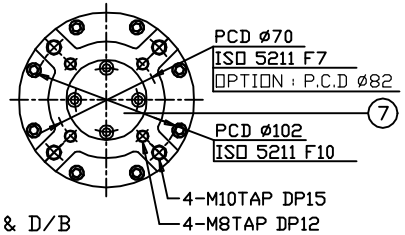

BASE & D/B

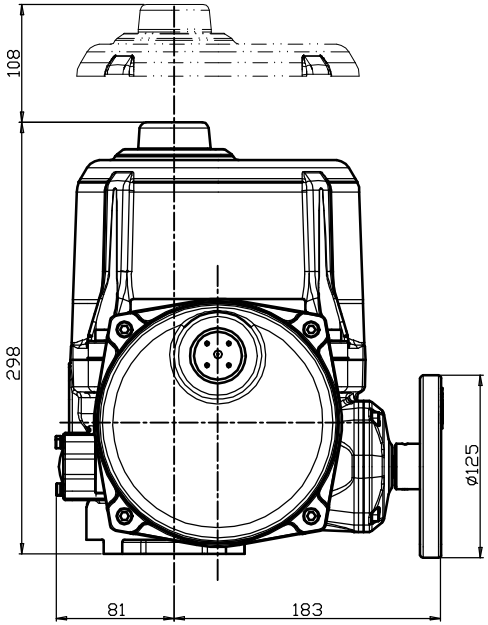

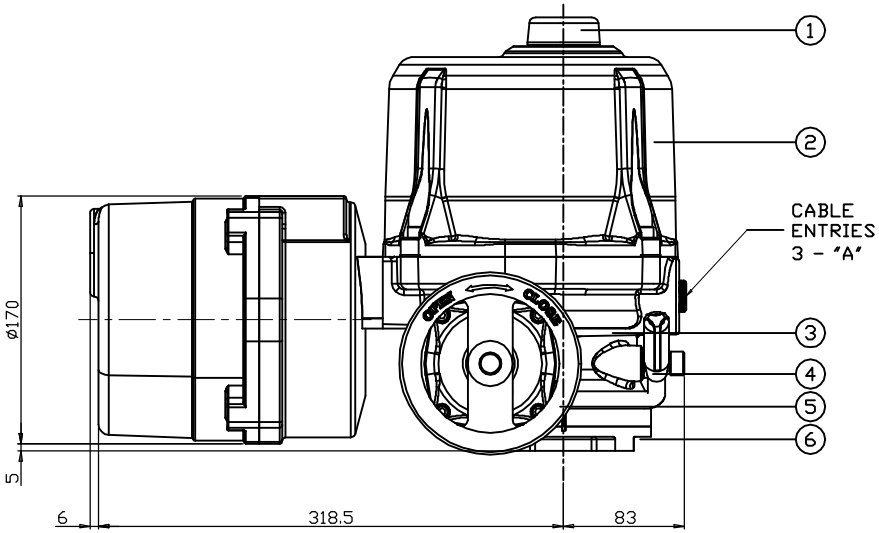

'A'
PF3/4
PF1
M20 pitch1.5
M25 pitch1.5
M32 pitch1.5
NTP3/4
NPT1

CABLE ENTRIES

N019.1	1
N015.1	1
APPLICATION	

PROJ.	△ SYM	E C N NO	CHANGES	DATE	SIGN / APPD
DRAW T.G KANG	SCALE 1/1	ISSU.DEPT. 연구소	PART NAME NA015,019 RBP / SCP ASS'Y		
DESIGN M.Y HWANG	DIM. mm	DATE 20.02.26			
CHECK	NOAH		DWG NO. N010-717-A		
APPD	NOAH ACTUATION CO., LTD		1 OF 1 SHEET	DWG SIZE N/S	