NO	PART NAME	MATERIAL	Q'TY	REMARK
1	WINDOW	PC	1	
2	TOP COVER	AC2B	1	
3	BODY	AC2B	1	
4	LEVER	SM45C	1	
5	HANDLE	AC2B	1	
6	BASE	GC25	1	
7	BUSHING	SM45C	1	
8	OPTION HOUSING	AC2B	1	

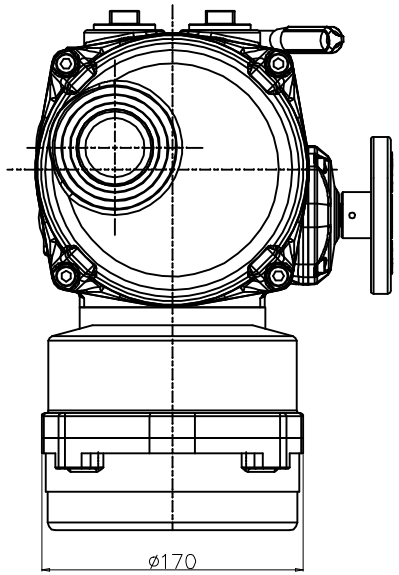

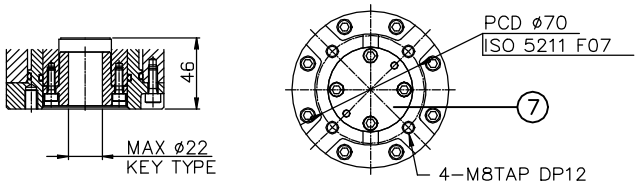

BASE & D/B

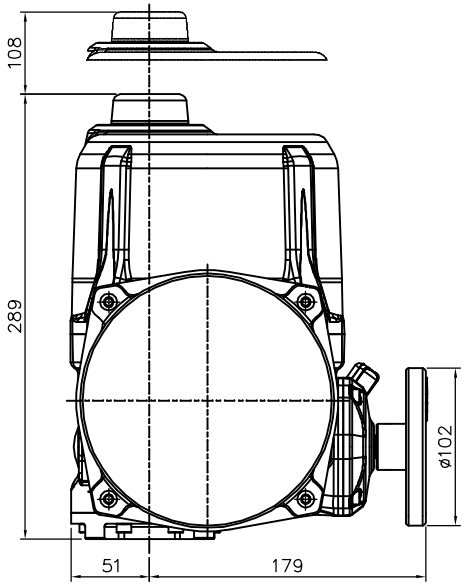

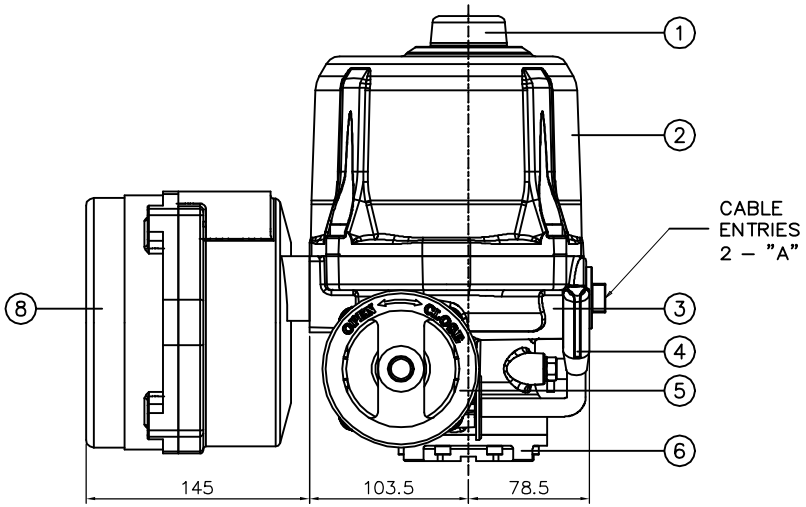

"A"
PF3/4
PF1
M20 pitch1.5
M25 pitch1.5
M32 pitch1.5
NTP3/4
NPT1

NA009.1	ㄱ
NA006.1	ㄱ
APPLICATION	

PROJ.	SYM	E C N NO	CHANGES	DATE	SIGN	APPD
DRAW T.G KANG	SCALE 1/1	ISSU.DEPT. 연구소	PART NAME	NA006,009 ASS'Y		
	DIM. mm	DATE 19.03.26				
CHECK M.Y HWANG	NOAH		DWG NO.	N005-702-A		
APPD	NOAH ACTUATION CO., LTD		1 OF 1 SHEET		DWG SIZE N/S	