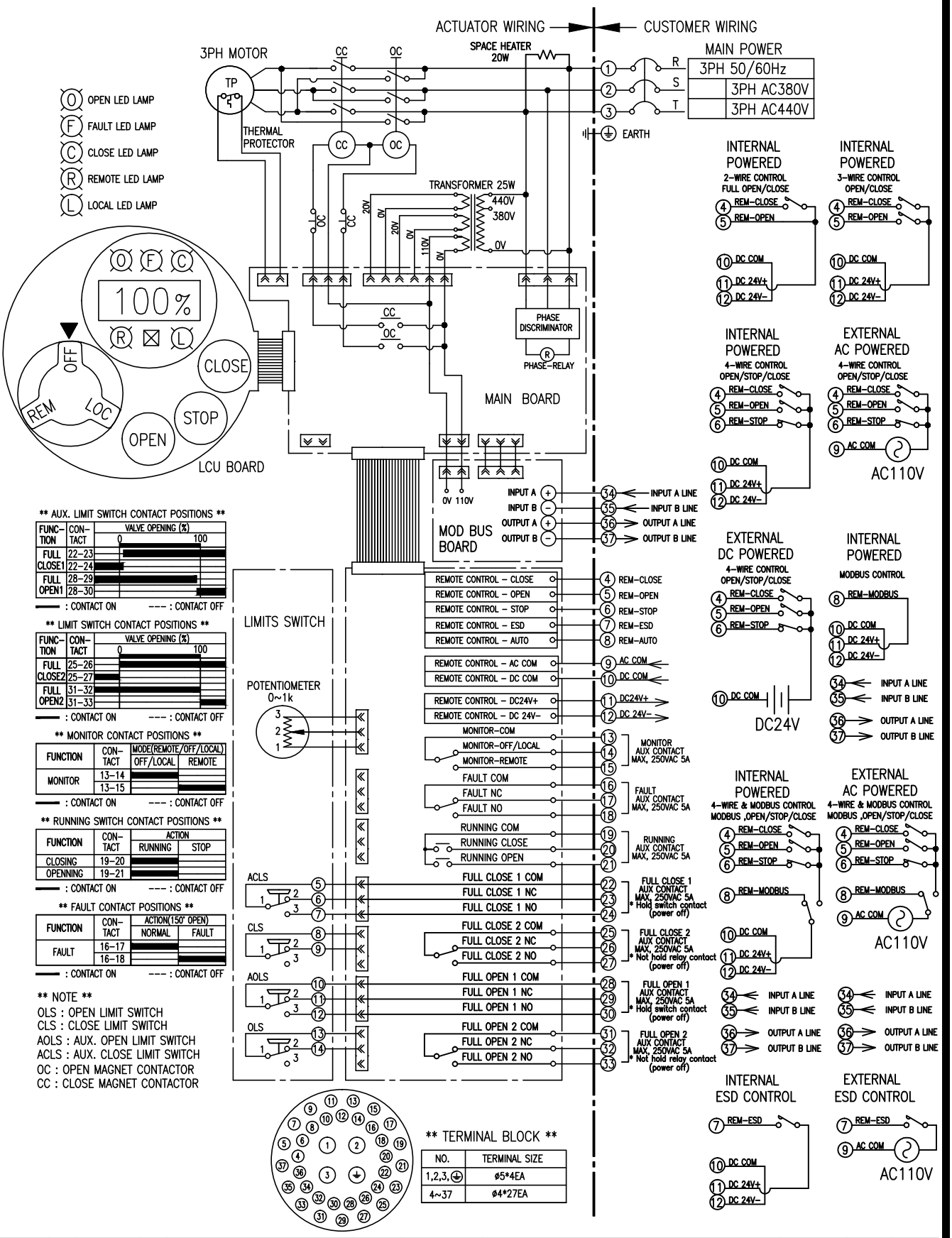

			DRAW	K.H. OH	△				
					SYM	E C N NO	CHANGES	DATE	SIGN	APPD
			CHECK	K.H. OH					
NL06	1		APPD	M.Y. HWANG	PART NAME		LINEAR 3PH WIRING DIAGRAM INTEGRAL MODBUS		
NL04	1								
APPLICATION			DATE	22.10.11.	DWG NO.		LU-304M-B		