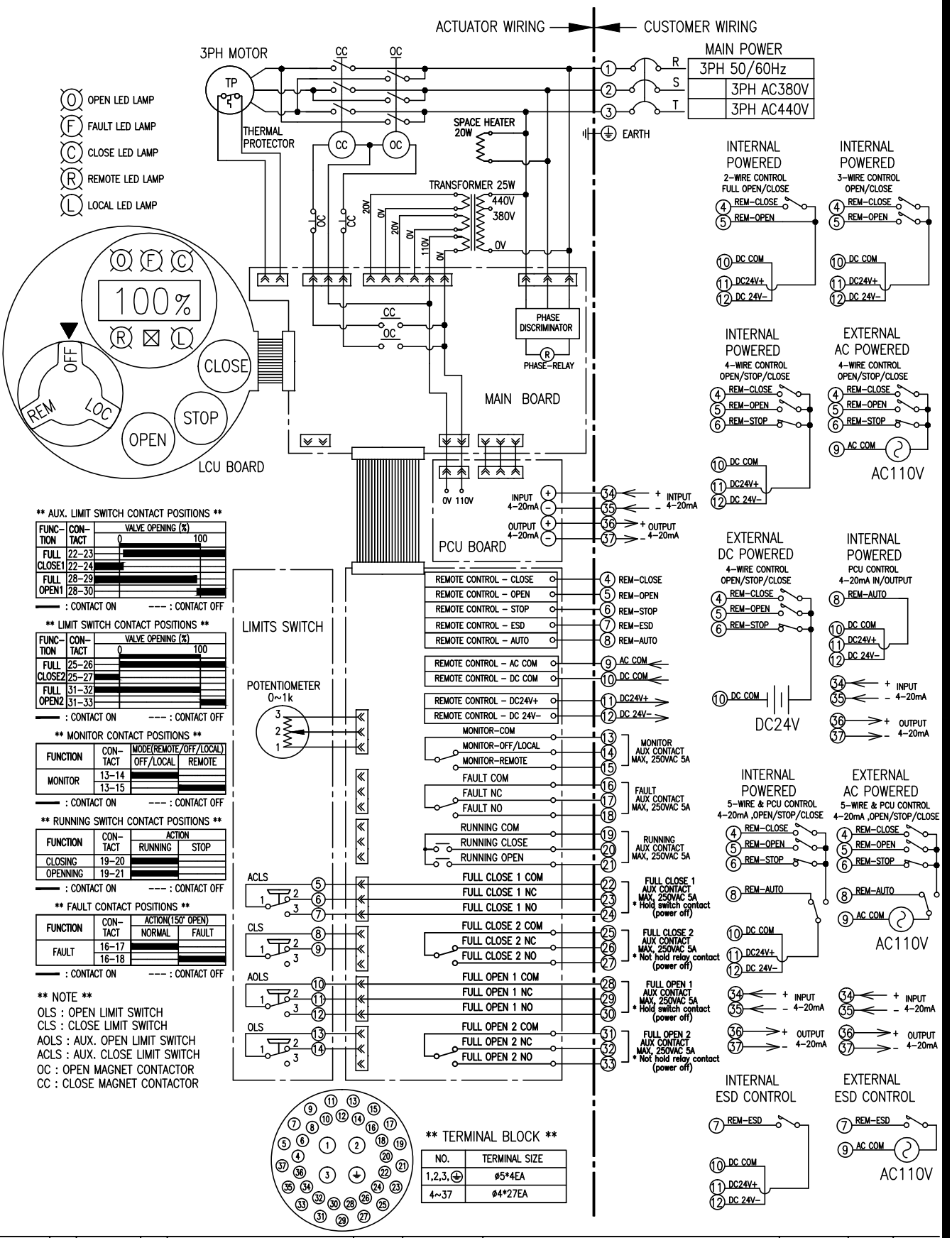

** AUX. LIMIT SWITCH CONTACT POSITIONS **

FUNCTION	CONTACT	VALVE OPENING (%) 0	100
FULL CLOSE1	22-23		
	22-24		
FULL OPEN1	28-29		
	28-30		

—— : CONTACT ON --- : CONTACT OFF

** LIMIT SWITCH CONTACT POSITIONS **

FUNCTION	CONTACT	VALVE OPENING (%) 0	100
FULL CLOSE2	25-26		
	25-27		
FULL OPEN2	31-32		
	31-33		

—— : CONTACT ON --- : CONTACT OFF

** MONITOR CONTACT POSITIONS **

FUNCTION	CONTACT	MODE(REMOTE/OFF/LOCAL) OFF/LOCAL	REMOTE
MONITOR	13-14		
	13-15		

—— : CONTACT ON --- : CONTACT OFF

** RUNNING SWITCH CONTACT POSITIONS **

FUNCTION	CONTACT	ACTION RUNNING	STOP
CLOSING	19-20		
OPENNING	19-21		

—— : CONTACT ON --- : CONTACT OFF

** FAULT CONTACT POSITIONS **

FUNCTION	CONTACT	ACTION(150° OPEN) NORMAL	FAULT
FAULT	16-17		
	16-18		

—— : CONTACT ON --- : CONTACT OFF

** NOTE **

OLS : OPEN LIMIT SWITCH
CLS : CLOSE LIMIT SWITCH
AOLS : AUX. OPEN LIMIT SWITCH
ACLS : AUX. CLOSE LIMIT SWITCH
OC : OPEN MAGNET CONTACTOR
CC : CLOSE MAGNET CONTACTOR

** TERMINAL BLOCK **

NO.	TERMINAL SIZE
1,2,3,⏚	ø5*4EA
4~37	ø4*27EA

			DRAW	K.H. OH	△			
			CHECK	K.H. OH	SYM	E C N NO	CHANGES	DATE	SIGN	APPD
NL06	1		APPD	M.Y. HWANG	PART NAME	LINEAR 3PH WIRING DIAGRAM INTEGRAL PCU				
NL04	1									
APPLICATION			DATE	22.10.11.	DWG NO.	LU-303-B				