CLS : CLOSE LIMIT SWITCH (250VAC 15A)
OLS : OPEN LIMIT SWITCH (250VAC 15A)
TP : THERMAL PROTECTOR (250VAC 15A)

	CLOSE	OPEN
CLS 1–2		
CLS 1–3		
OLS 1–2		
OLS 1–3		

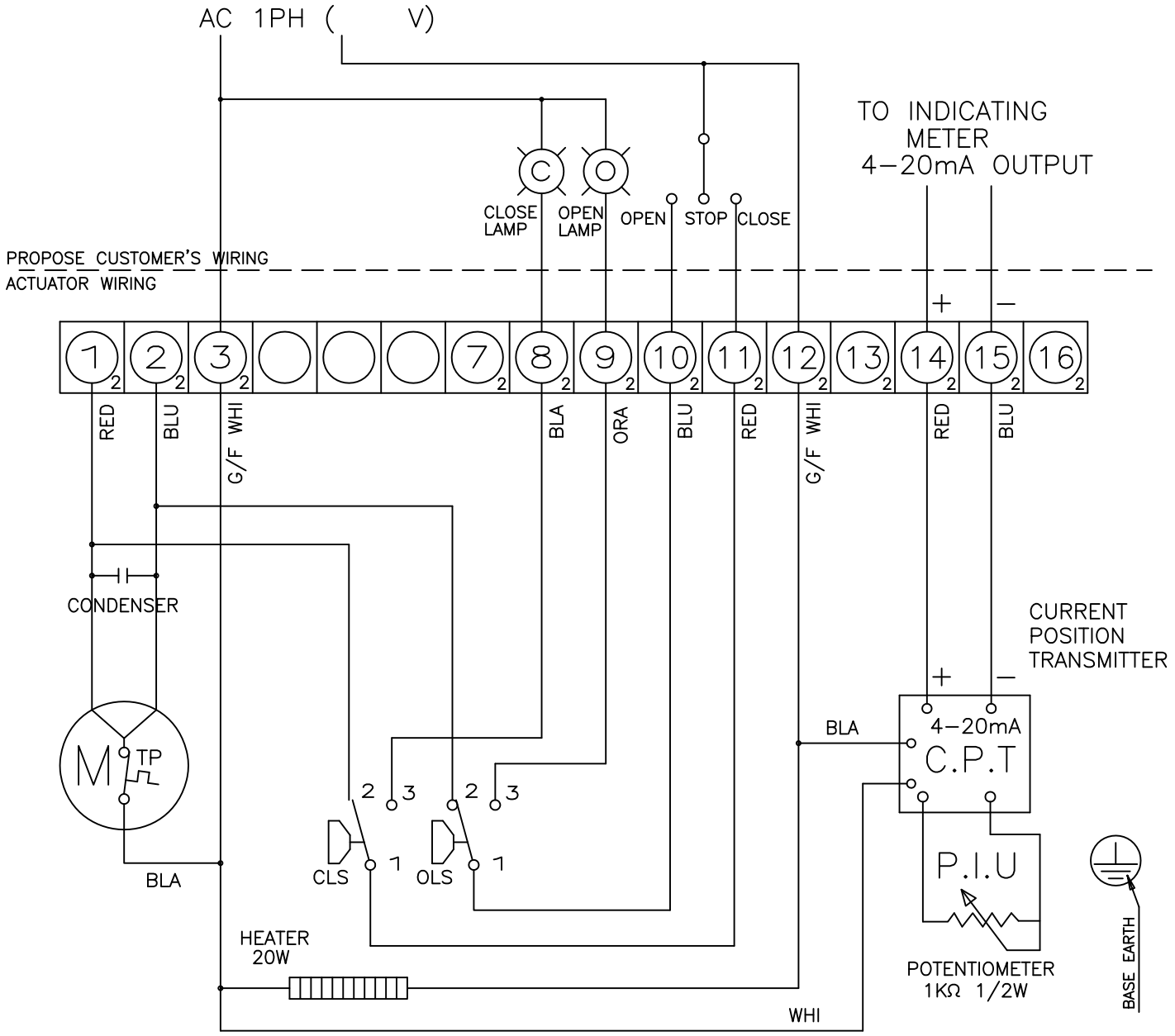

	DRAW H.J KWON	△					
		SYM	E C N NO	CHANGES	DATE	SIGN	APPD
	DESIGN H.J KWON	ISSU.DEPT.		DATE '12,11,27	PART NAME 1PH WIRING DIAGRAM CPT		
NL06 1	CHECK	Noah					
NL04 1		EUNHA MACHINERY IND. CO., LTD.			DWG NO. LU–18000–C		
APPLICATION	APPD						