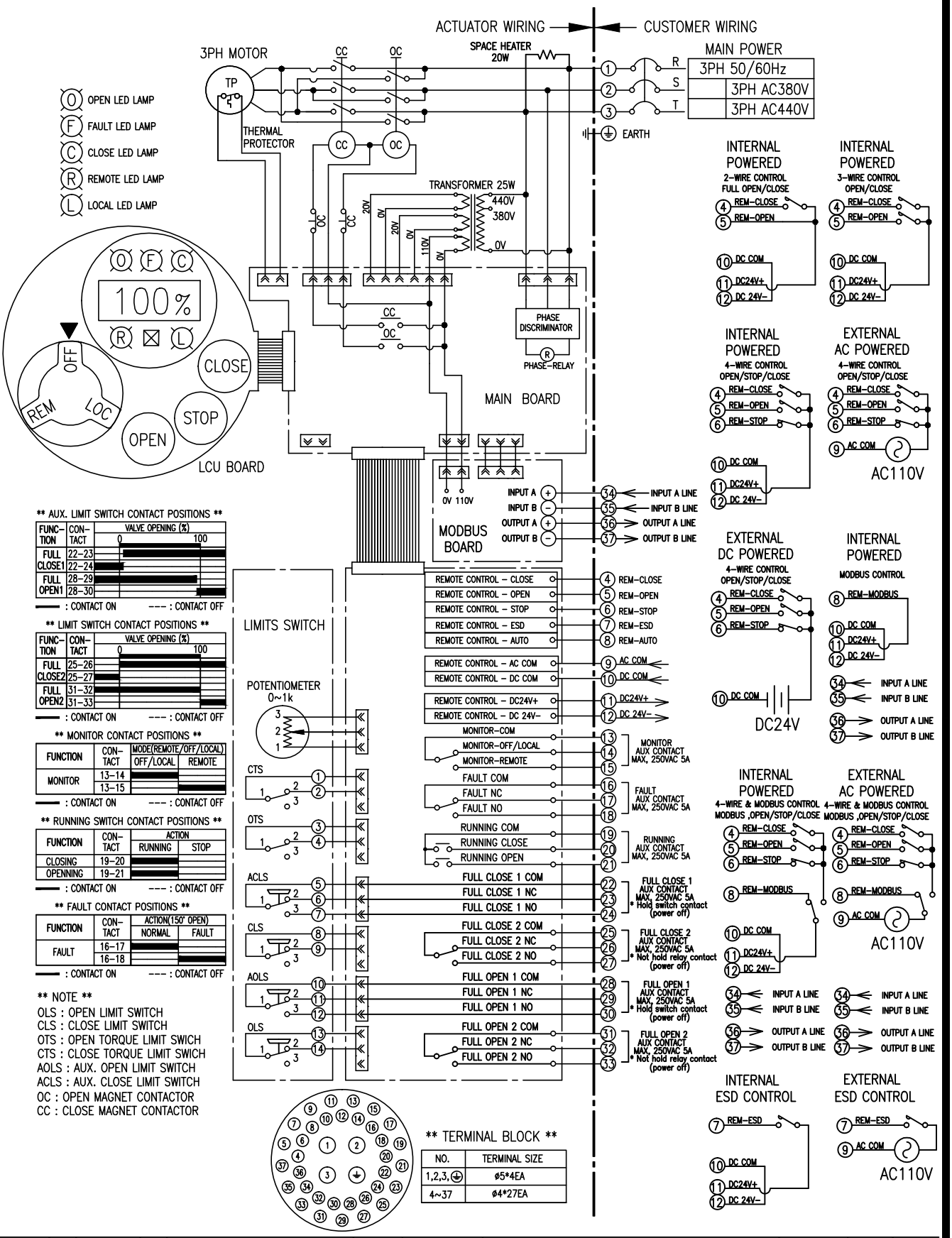

			DRAW	K.H. OH	△					
NL25	1				SYM	E C N NO	CHANGES	DATE	SIGN	APPD
NL20	1		CHECK	K.H. OH						
NL10	1		APPD	M.Y. HWANG	PART NAME		LINEAR 3PH WIRING DIAGRAM INTEGRAL MODBUS			
NL08	1									
APPLICATION			DATE	22.10.11.	DWG NO.		LS-304M-B			