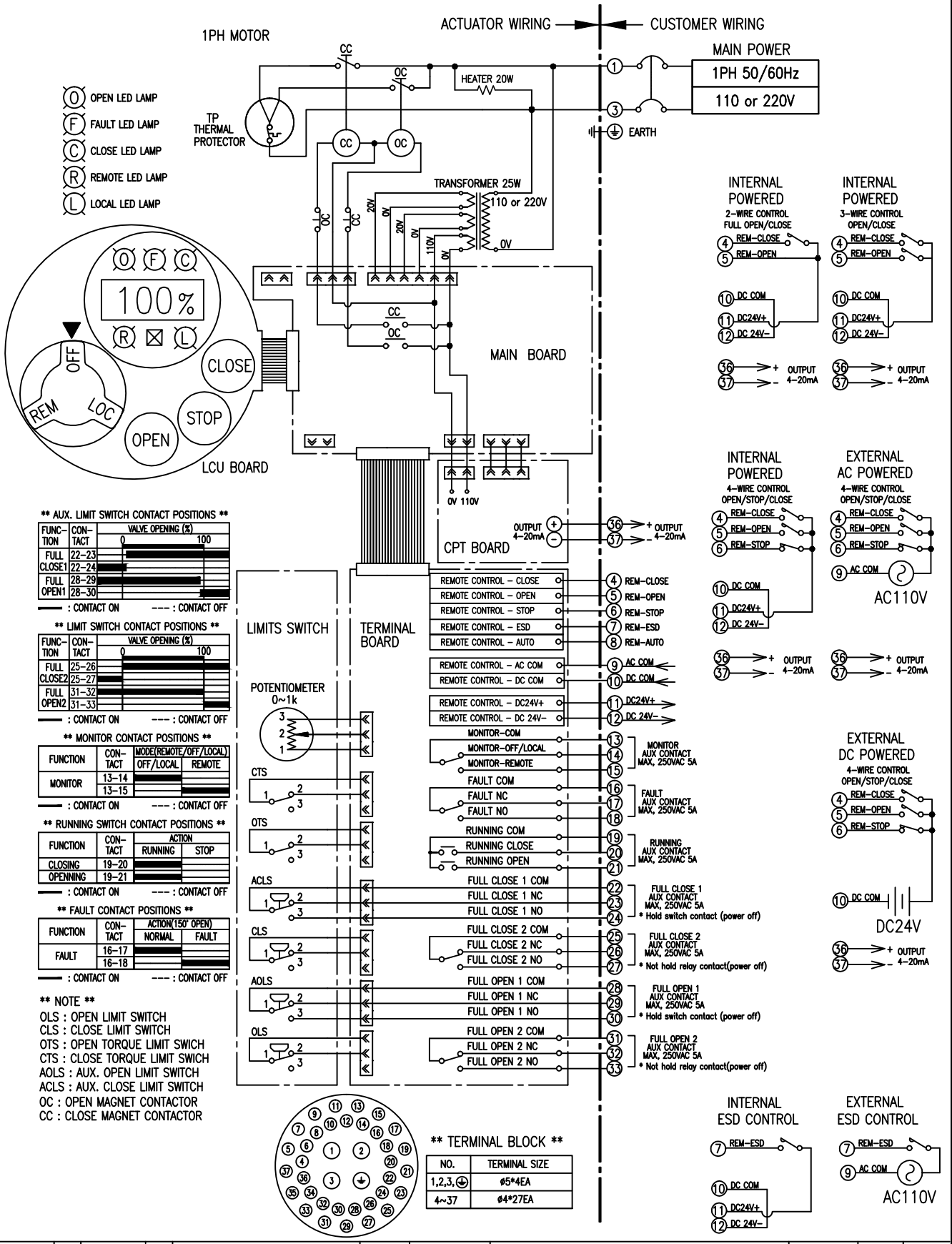

** AUX. LIMIT SWITCH CONTACT POSITIONS **

FUNCTION	CONTACT	VALVE OPENING (%) 0	100
FULL CLOSE1	22-23		
	22-24		
FULL OPEN1	28-29		
	28-30		

—— : CONTACT ON --- : CONTACT OFF

** LIMIT SWITCH CONTACT POSITIONS **

FUNCTION	CONTACT	VALVE OPENING (%) 0	100
FULL CLOSE2	25-26		
	25-27		
FULL OPEN2	31-32		
	31-33		

—— : CONTACT ON --- : CONTACT OFF

** MONITOR CONTACT POSITIONS **

FUNCTION	CONTACT	MODE(REMOTE/OFF/LOCAL) OFF/LOCAL	REMOTE
MONITOR	13-14		
	13-15		

—— : CONTACT ON --- : CONTACT OFF

** RUNNING SWITCH CONTACT POSITIONS **

FUNCTION	CONTACT	ACTION RUNNING	STOP
CLOSING	19-20		
OPENNING	19-21		

—— : CONTACT ON --- : CONTACT OFF

** FAULT CONTACT POSITIONS **

FUNCTION	CONTACT	ACTION(150° OPEN) NORMAL	FAULT
FAULT	16-17		
	16-18		

—— : CONTACT ON --- : CONTACT OFF

** NOTE **

OLS : OPEN LIMIT SWITCH
CLS : CLOSE LIMIT SWITCH
OTS : OPEN TORQUE LIMIT SWICH
CTS : CLOSE TORQUE LIMIT SWICH
AOLS : AUX. OPEN LIMIT SWITCH
ACLS : AUX. CLOSE LIMIT SWITCH
OC : OPEN MAGNET CONTACTOR
CC : CLOSE MAGNET CONTACTOR

** TERMINAL BLOCK **

NO.	TERMINAL SIZE
1,2,3,⏚	ø5*4EA
4~37	ø4*27EA

NL25	1		
NL20	1		
NL10	1		
NL08	1		
APPLICATION			

DRAW	K.H. OH
CHECK	K.H. OH
APPD	M.Y. HWANG
DATE	22.10.11.

SYM	E C N NO	CHANGES	DATE	SIGN	APPD

PART NAME: LINEAR 1PH WIRING DIAGRAM INTEGRAL CPT

DWG NO. LS-202-B