INPUT FLANGE DETAILS							MOUNTING HOLES - BOLT CIRCLE (OFF CENTRES)								
INPUT FLANGE	FLANGE O/DIA. + THICKNESS	SHAFT DIA.	RECESS DIA.	RECESS DEPTH	HOLE DETAILS (45° OFF CENTRES)	KEY DETAILS	ISO 5211 / MSS SP-101 MOUNTING OPTION	HOLE DETAILS (22.5° OFF CENTRES)	STANDARD	MIN BORE	SQ KEY MAX BORE	SQ KEY SIZE	RECT. KEY MAX BORE	RECT. KEY SIZE	SQ BORE MAX
ISO F10	Ø125 x 15 (Ø4.92" x 0.59")	Ø20.00-0.05 (Ø0.787"-0.002")	Ø70.05+0.15 (Ø2.758"+0.006")	4 (0.16")	4 x Ø10.5 ON Ø102.0 P.C. (4 x Ø0.41" ON Ø4.02" P.C.)	6x6x40 (0.24"x0.24"x1.57")	ISO F35*	8 x M30 x 36 (1.42") DEEP ON Ø356.0 (Ø14.02") P.C.	BS4235	-	-	-	157	40 x 22	□ 122.9 (4.84")
									BS46	-	5.625"	1.1/2" SQ.	6.00"	1.1/2" x 1"	
FA10			Ø58.70+0.15 (Ø2.311"+0.006")				FA35*	8 x 1" UNC x 36 (1.42") DEEP ON Ø355.6 (Ø14.00") P.C.	ANSI B17.1	-	5.625"	1.1/2" SQ.	6.00"	1.1/2" x 1"	
									DIN 6885	-	-	-	157	40 x 22	

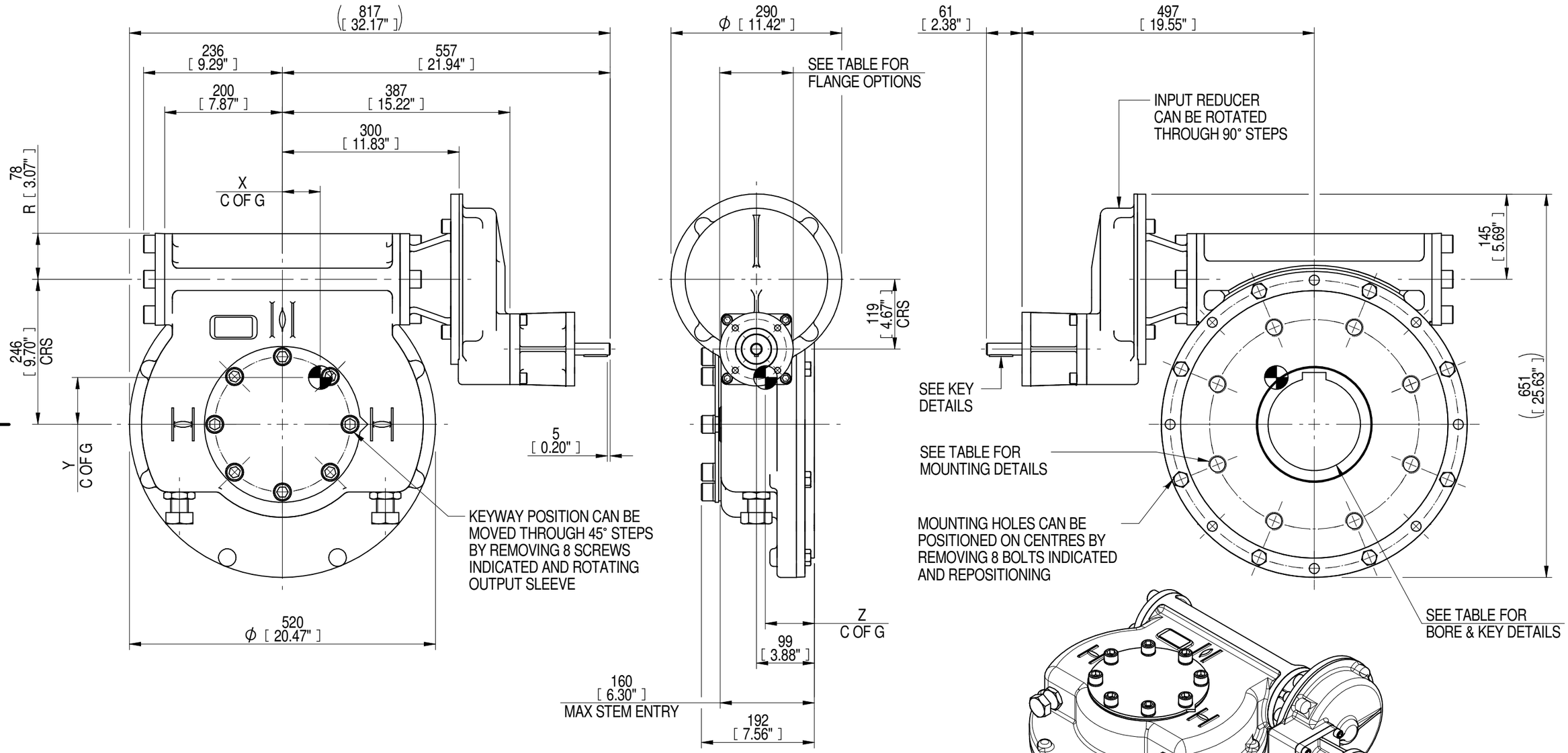

1:9

PLAN VIEW OF GEARBOX IN CLOSED POSITION SHOWING STANDARD KEYWAY POSITIONS. ALTERNATIVES AVAILABLE ON REQUEST

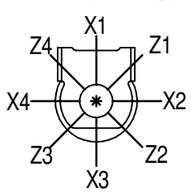

NOTES:
1. * THREAD DEPTH DOES NOT MATCH ISO STANDARD
2. CENTRE OF GRAVITY POSITION IS INDICATIVE FOR STANDARD BUILD WHEN IN POSITION SHOWN

RATIO	TURNS TO CLOSE	M.A. ± 10%	WEIGHT (Kg)	MAX OUTPUT (Nm)	MAX INPUT (Nm)	X	Y	Z
360	90	142	173	26031	183	65	81	83
240	60	95	173	26031	274	64	80	83
180	45	71	173	26031	367	64	80	83
120	30	48	173	26031	542	64	80	83
DESCRIPTION				TORQUE		CENTRE OF GRAVITY		

AS PART OF CONTINUOUS PRODUCT DEVELOPMENT, ALL DETAILS SUBJECT TO CHANGE WITHOUT PRIOR NOTICE. FOR UP TO DATE DETAILS PLEASE VISIT www.rotork.com

rotork® Gears
LEEDS - UK
www.rotork.com

This drawing is confidential and is the property of Rotork Gears and must not be reproduced either wholly or partly. All rights in respect of patents, designs and copyrights are reserved. ©2016

Document Type **PUBLICITY**
Dimensions in mm

Title
IW/MOW8 QUARTER TURN GEARBOX, 120/180/240/360 : 1, F10/ FA10 INPUT : F35/ FA35 OUTPUT

Drawing Number
PUB-IW8FBIRS-F10-F35
Iss. 01

Sheet 1 of 1 Size A3

Rev 05