INPUT FLANGE DETAILS							MOUNTING HOLES - BOLT CIRCLE (OFF CENTRES)								
INPUT FLANGE	FLANGE O/DIA. + THICKNESS	SHAFT DIA.	RECESS DIA.	RECESS DEPTH	HOLE DETAILS (45° OFF CENTRES)	KEY DETAILS	ISO 5211 / MSS SP-101 MOUNTING OPTION	HOLE DETAILS (22.5° OFF CENTRES)	STANDARD	MIN BORE	SQ KEY MAX BORE	SQ KEY SIZE	RECT. KEY MAX BORE	RECT. KEY SIZE	SQ BORE MAX
ISO F10	Ø125 x 15 (Ø4.92" x 0.59")	Ø20.00-0.05 (Ø0.787"-0.002")	Ø70.05+0.15 (Ø2.758"+0.006")	4 (0.16")	4 x Ø10.5 ON Ø102.0 P.C. (4 x Ø0.41" ON Ø4.02" P.C.)	6x6x40 (0.24"x0.24"x1.57")	ISO F25*	8 x M16 x 24 (0.94") DEEP ON Ø254.0 (Ø10.00") P.C.	BS4235	-	-	-	136	36 x 20	□ 108.8 (4.28")
									BS46	-	4.875"	1.1/4" SQ.	5.125"	1.1/2" x 1"	
FA10			Ø58.70+0.15 (Ø2.311"+0.006")				FA25*	8 x 5/8" UNC x 24 (0.94") DEEP ON Ø254.0 (Ø10.00") P.C.	ANSI B17.1	-	4.875"	1.1/4" SQ.	5.25"	1.1/4" x 7/8"	
									DIN 6885	-	-	-	136	36 x 20	

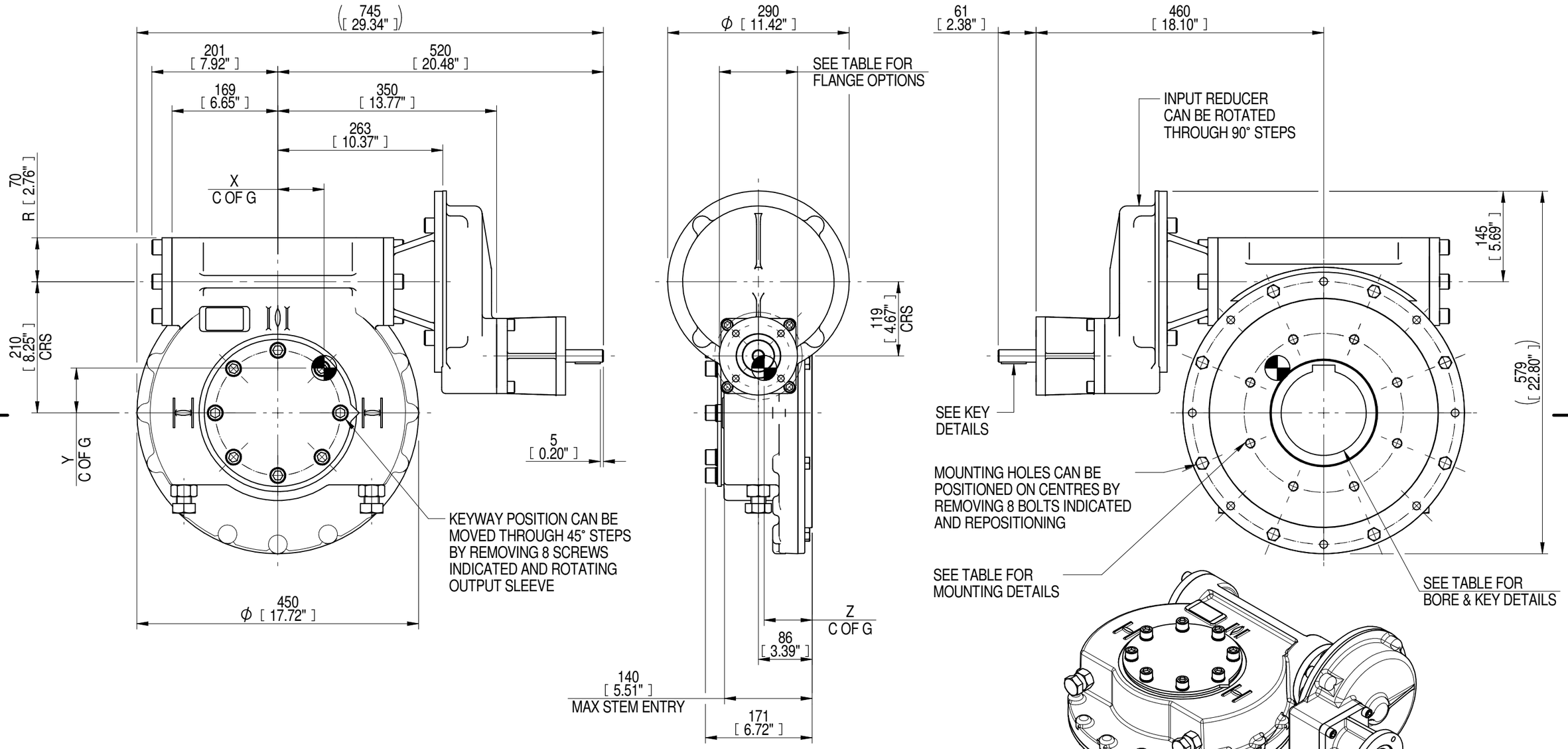

PLAN VIEW OF GEARBOX IN CLOSED POSITION SHOWING STANDARD KEYWAY POSITIONS. ALTERNATIVES AVAILABLE ON REQUEST

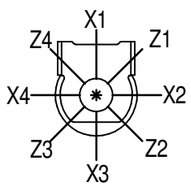

NOTES:
1. * THREAD DEPTH DOES NOT MATCH ISO STANDARD
2. CENTRE OF GRAVITY POSITION IS INDICATIVE FOR STANDARD BUILD WHEN IN POSITION SHOWN

RATIO	TURNS TO CLOSE	M.A. ± 10%	WEIGHT (Kg)	MAX OUTPUT (Nm)	MAX INPUT (Nm)	X	Y	Z
360	90	142	127	15253	107	74	73	77
240	60	95	127	15253	161	74	73	77
180	45	71	127	13558	191	74	72	77
120	30	48	127	13558	282	74	72	77
DESCRIPTION				TORQUE		CENTRE OF GRAVITY		

AS PART OF CONTINUOUS PRODUCT DEVELOPMENT, ALL DETAILS SUBJECT TO CHANGE WITHOUT PRIOR NOTICE. FOR UP TO DATE DETAILS PLEASE VISIT www.rotork.com

rotork® Gears
LEEDS - UK
www.rotork.com

This drawing is confidential and is the property of Rotork Gears and must not be reproduced either wholly or partly. All rights in respect of patents, designs and copyrights are reserved. ©2016

Document Type **PUBLICITY**
Dimensions in mm

Title
IW/MOW7 QUARTER TURN GEARBOX, 120/180/240/360 : 1, F10/ FA10 INPUT : F25/FA25 OUTPUT

Drawing Number
PUB-IW7FBIRS-F10-F25
Iss. 01

Sheet **1** of **1** Size A3

Rev 05