INPUT FLANGE DETAILS							MOUNTING HOLES - BOLT CIRCLE (OFF CENTRES)				STEM ACCEPTANCE IN ACCORDANCE TO STANDARD						
INPUT FLANGE	FLANGE O/DIA.	SHAFT DIA.	RECESS DIA.	RECESS DEPTH	HOLE DETAILS (OFF CENTRES)	KEY DETAILS	ISO 5211 / MSS SP-101 MOUNTING OPTION	HOLE DETAILS (OFF CENTRES)	MAX OUTSIDE DIA. INCLUDING DRILLED HOLES	MIN INSIDE DIA. INCLUDING DRILLED HOLES	SQ BORE MAX	STANDARD	MIN BORE	SQ KEY MAX BORE	SQ KEY SIZE	RECT. KEY MAX BORE	RECT KEY SIZE
ISO F10	Ø125 x 20 (Ø4.92" x 0.787")	Ø20.00-0.05 (Ø0.787"-0.002")	Ø70.05+0.15 (Ø2.758"+0.006")	4 (0.16")	4 x Ø10.5 ON Ø102.0 P.C. (4 x Ø0.41" ON Ø4.02" P.C.)	6x6x40 (0.24"x0.24"x1.57")	ISO F25*	8 x M16 x 24 (0.94") DEEP ON Ø254.0 (Ø10.00") P.C.	Ø336 (13.23")	Ø197 (7.73")	□ 108.8 (4.28")	BS4235	-	-	-	136	36 x 20
												BS46	-	4.875"	1 1/4" SQ.	5.125"	1 1/2" x 1"
FA10			Ø58.70+0.15 (Ø2.311"+0.006")				FA25*	8 x 5/8" UNC x 24 (0.94") DEEP ON Ø254.0 (Ø10.00") P.C.				ANSI B17.1	-	4.875"	1 1/4" SQ.	5.25"	1 1/4" x 7/8"
												DIN 6885	-	-	-	136	36 x 20

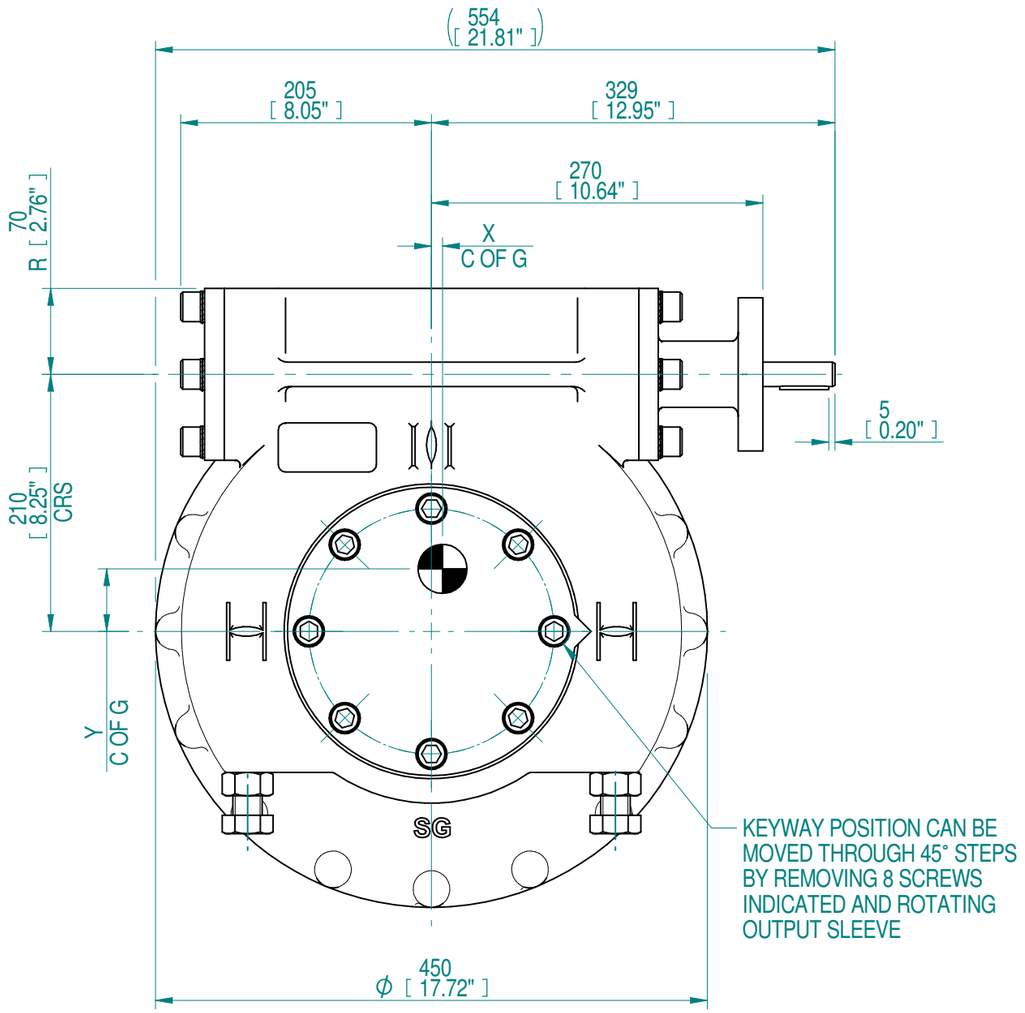

KEYWAY POSITION CAN BE MOVED THROUGH 45° STEPS BY REMOVING 8 SCREWS INDICATED AND ROTATING OUTPUT SLEEVE

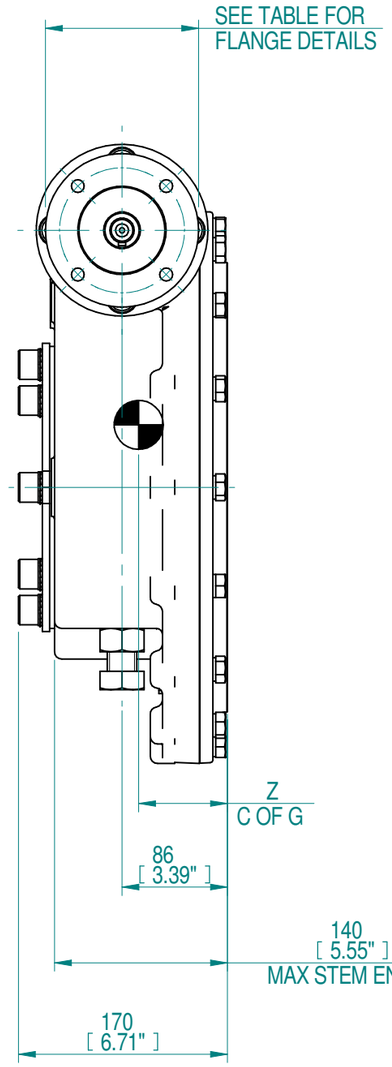

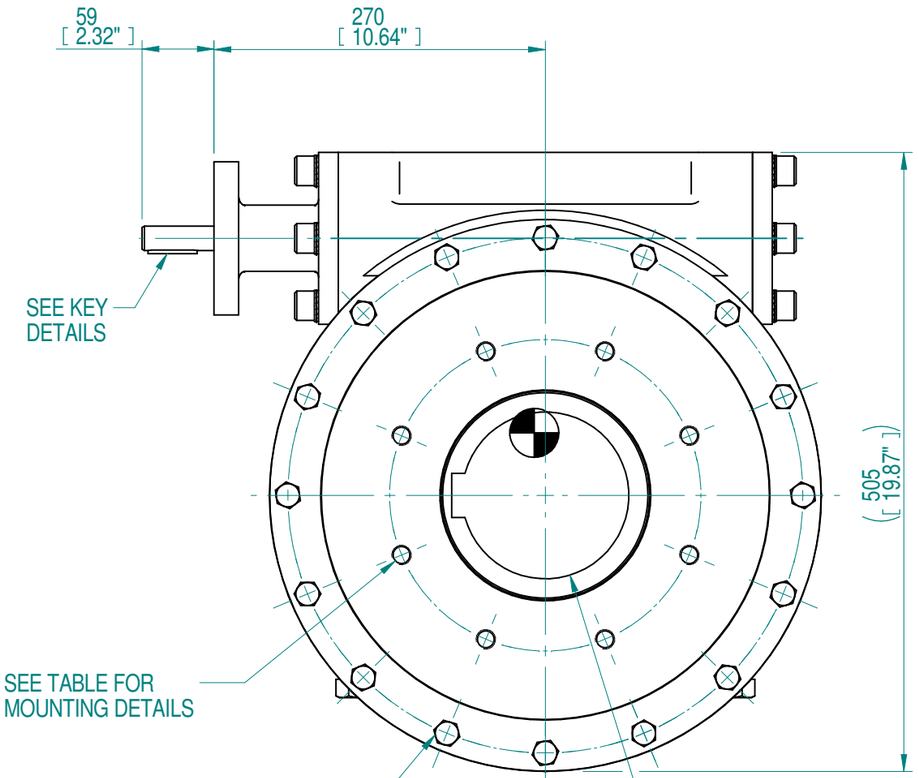

MOUNTING HOLES CAN BE POSITIONED ON CENTRES BY REMOVING 16 BOLTS INDICATED AND REPOSITIONING

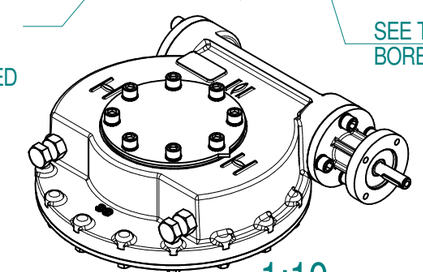

1:10

PLAN VIEW OF GEARBOX IN CLOSED POSITION SHOWING STANDARD KEYWAY POSITIONS. ALTERNATIVES AVAILABLE ON REQUEST

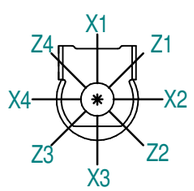

NOTES:
1. OTHER INPUT AND OUTPUT OPTIONS AVAILABLE - SEE 'IW GEARBOX BROCHURE' AT WWW.ROTORK.COM FOR FURTHER DETAILS.
2. CENTRE OF GRAVITY POSITION IS INDICATIVE FOR STANDARD BUILD WHEN IN POSITION SHOWN.
3. * THREAD DEPTH DOES NOT MATCH ISO STANDARD.
4. WEIGHT AND C OF G DIMENSIONS WILL VARY +/-1% DEPENDING ON RATIO.

64	16	21	109	15253	724	9	51	72
RATIO	TURNS TO CLOSE	M.A. (±10%)	WEIGHT (KG)	MAX OUTPUT (Nm)	MAX INPUT (Nm)	X	Y	Z
DESCRIPTION				TORQUE		CENTRE OF GRAVITY		

Rev	ECN	Revised	Rev. Approved	Date	Change Description
0-1		J.Dickinson	J.Dickinson	2019-11-12	Include secondary units

AS PART OF CONTINUOUS PRODUCT DEVELOPMENT, ALL DETAILS SUBJECT TO CHANGE WITHOUT PRIOR NOTICE. FOR UP TO DATE DETAILS PLEASE VISIT www.rotork.com

rotork® Gears
Leeds - UK
www.rotork.com

©2019 Rotork Group of Companies. All rights reserved. This document and its contents may not be reproduced, distributed, transmitted, displayed, published, or broadcast, in whole, or in part, without the prior, express written permission of Rotork Group of Companies.

Dimensions in mm
Scale 1:5

Title **IW7 N QUARTER TURN GEARBOX**

Created	S.Monish	2019-09-27
Checked	V.G.Balaji	2019-10-09
Approved	J.Dickinson	2019-11-07

Drawing Number **PUB-IW7-N**
Rev 0-1
Nominal Mass **SEE TABLE**
Size A3
Sheet 1 of 1

Template Issue : 2018-05-10