| INPUT FLANGE DETAILS | | | | | | | MOUNTING HOLES - BOLT CIRCLE (OFF CENTRES) | | | | STEM ACCEPTANCE IN ACCORDANCE TO STANDARD | | | | | | |
|---|---|---|---|---|---|---|---|---|---|---|---|---|---|---|---|---|---|
| INPUT FLANGE | FLANGE O/DIA. | SHAFT DIA. | RECESS DIA. | RECESS DEPTH | HOLE DETAILS (OFF CENTRES) | KEY DETAILS | ISO 5211 / MSS SP-101 MOUNTING OPTION | HOLE DETAILS (OFF CENTRES) | MAX OUTSIDE DIA. INCLUDING DRILLED HOLES | MIN INSIDE DIA. INCLUDING DRILLED HOLES | SQ BORE MAX | STANDARD | MIN BORE | SQ KEY MAX BORE | SQ KEY SIZE | RECT. KEY MAX BORE | RECT KEY SIZE |
| ISO F10 | Ø125 x 16 (Ø4.92" x 0.63") | Ø20.00-0.05 (Ø0.787"-0.002") | Ø70.05+0.15 (Ø2.758"+0.006") | 4 (0.16") | 4 x Ø10.5 ON Ø102.0 P.C. (4 x Ø0.41" ON Ø4.02" P.C.) | 6x6x40 (0.24"x0.24"x1.57") | ISO F14* | 4 x M16 x 20 (0.79") DEEP ON Ø140.0 (Ø5.51") P.C. | Ø198 (7.79") | Ø122 (4.80") | □ 62 (2.44") | BS4235 | - | - | - | 76 | 22 x 14 |
| | | | | | | | | | | | | BS46 | - | 2.75" | 3/4" SQ. | 3" | 3/4" x 1/2" |
| FA10 | | | Ø58.70+0.15 (Ø2.311"+0.006") | | | | FA14* | 4 x 5/8" UNC x 20 (0.79") DEEP ON Ø139.7 (Ø5.50") P.C. | | | | ANSI B17.1 | - | 2.75" | 5/8" SQ. | 3" | 3/4" x 1/2" |
| | | | | | | | | | | | | DIN 6885 | - | - | - | 76 | 22 x 14 |

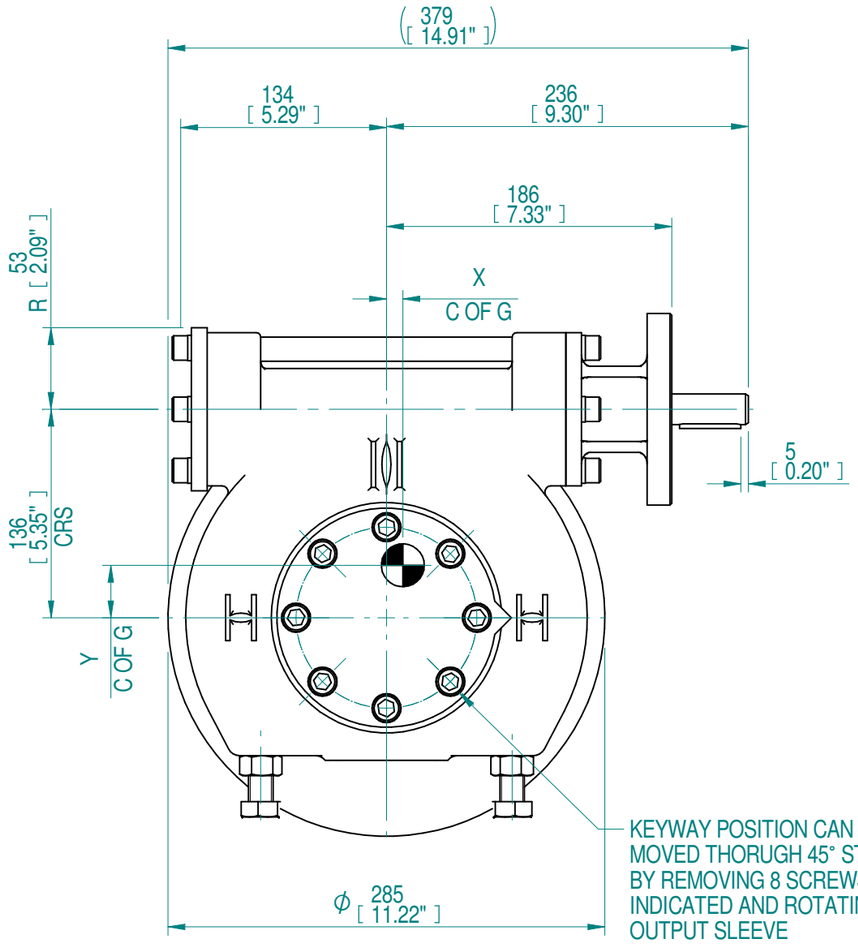


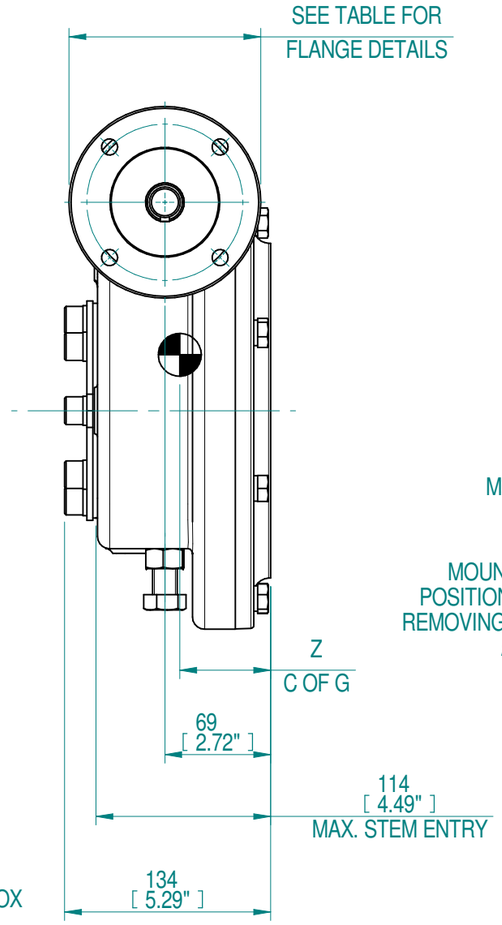


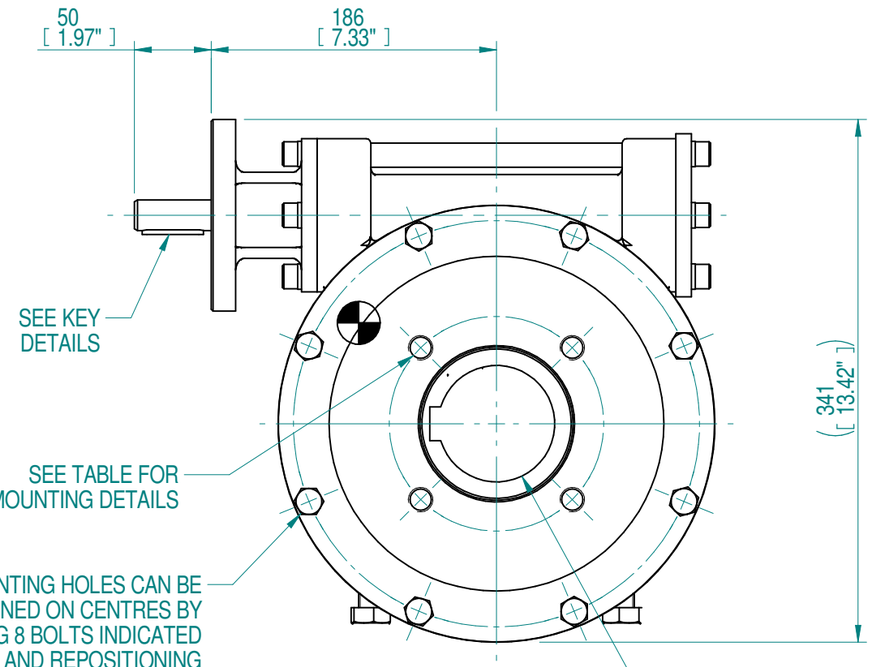


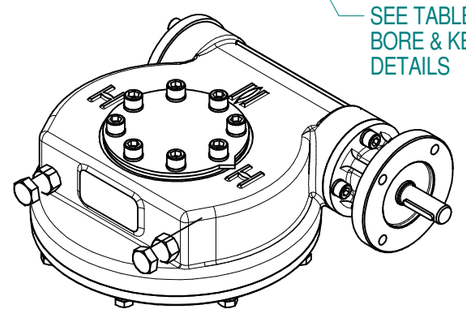

1:6

PLAN VIEW OF GEARBOX IN CLOSED POSITION SHOWING STANDARD KEYWAY POSITIONS. ALTERNATIVES AVAILABLE ON REQUEST

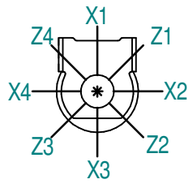


NOTES:
1. OTHER INPUT AND OUTPUT OPTIONS AVAILABLE - SEE 'IW GEARBOX BROCHURE' AT WWW.ROTORK.COM FOR FURTHER DETAILS.
2. CENTRE OF GRAVITY POSITION IS INDICATIVE FOR STANDARD BUILD WHEN IN POSITION SHOWN.
3. * THREAD DEPTH DOES NOT MATCH ISO STANDARD.
4. WEIGHT AND C OF G DIMENSIONS WILL VARY +/-1% DEPENDING ON RATIO.

| 48 | 12 | 16 | 39 | 6670 | 417 | 9 | 36 | 59 |
|---|---|---|---|---|---|---|---|---|
| RATIO | TURNS TO CLOSE | M.A. (±10%) | WEIGHT (KG) | MAX OUTPUT (Nm) | MAX INPUT (Nm) | X | Y | Z |
| DESCRIPTION | | | | TORQUE | | CENTRE OF GRAVITY | | |

| Rev | ECN | Revised | Rev. Approved | Date | Change Description |
|---|---|---|---|---|---|
| 0-1 | | J.Dickinson | J.Dickinson | 2019-11-12 | Include secondary units |

AS PART OF CONTINUOUS PRODUCT DEVELOPMENT, ALL DETAILS SUBJECT TO CHANGE WITHOUT PRIOR NOTICE. FOR UP TO DATE DETAILS PLEASE VISIT www.rotork.com

rotork® Gears
Leeds - UK
www.rotork.com

©2019 Rotork Group of Companies. All rights reserved. This document and its contents may not be reproduced, distributed, transmitted, displayed, published, or broadcast, in whole, or in part, without the prior, express written permission of Rotork Group of Companies.

Dimensions in mm
Scale 1:4

Title **IW52 N QUARTER TURN GEARBOX**

| | | |
|---|---|---|
| Created | S.Monish | 2019-09-27 |
| Checked | V.G.Balaji | 2019-10-09 |
| Approved | J.Dickinson | 2019-11-08 |

Drawing Number **PUB-IW52-N**
Rev 0-1
Nominal Mass **SEE TABLE** Size A3 Sheet 1 of 1

Template Issue : 2018-05-10