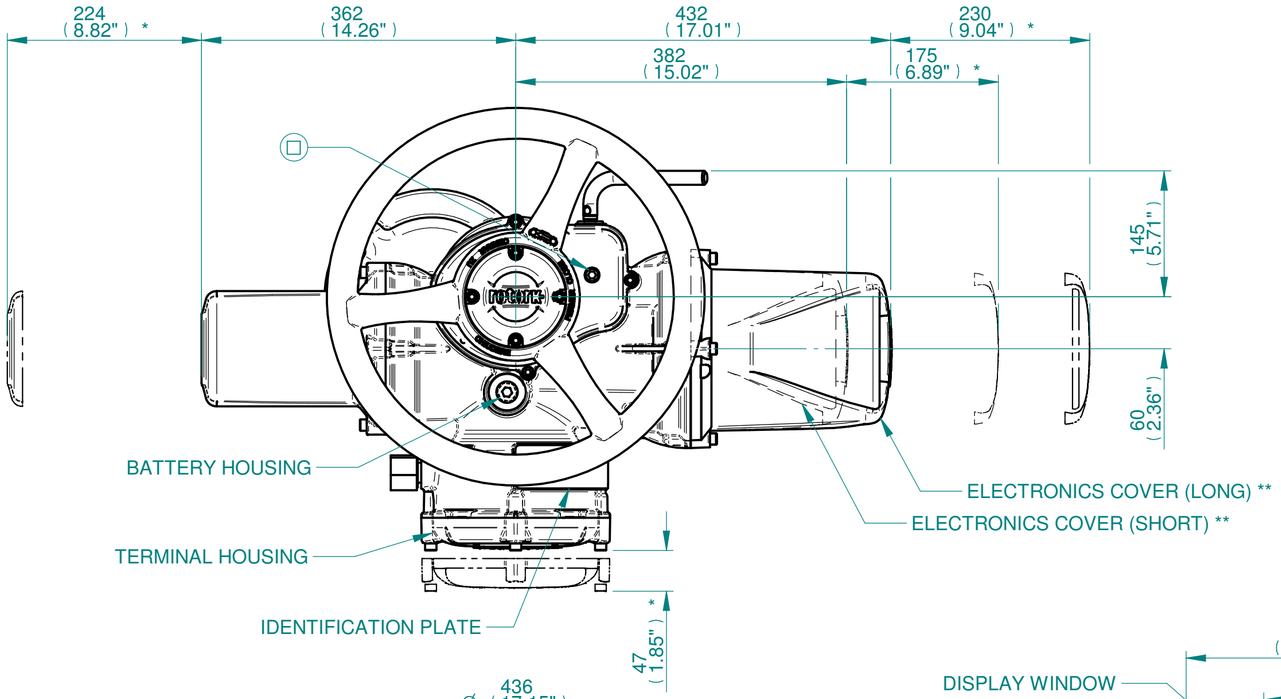

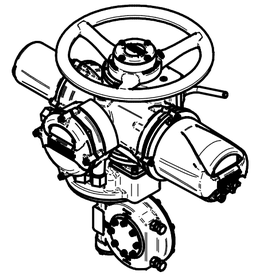

ISOMETRIC VIEW
(SCALE 1:12)

NOTES:

:DIMENSIONS WITH '*' INDICATE COVER REMOVAL ALLOWANCE

:ELECTRONICS COVER OPTION "**" WILL VARY DEPENDING ON CONFIGURATION

:NETT WEIGHT = 85kg/187lbs

: ⬚ = OIL FILLER/DRAIN PLUG

:THE INTERFACE PROVIDED FOR MOUNTING THE ACTUATOR OR SECOND STAGE GEARBOX ONTO THE VALVE SHOULD CONFORM TO GOOD ENGINEERING PRACTICES, ENSURING ADEQUATELY TOLERANCED LIMITS FOR PARALLELISM, PERPENDICULARITY AND CONCENTRICITY.

:ROTORK CANNOT BE HELD LIABLE FOR DAMAGE TO OUR EQUIPMENT CAUSED BY EXCESSIVE LOADING FROM COVER TUBES. (SEE ALSO PUB000-124)

CONDUIT ENTRIES

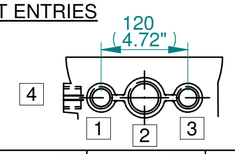

	Hole 1	Hole 2	Hole 3	Hole 4
Size	As Required	As Required	As Required	As Required
Plugged	As Required	As Required	As Required	As Required
Gland	As Required	As Required	As Required	As Required

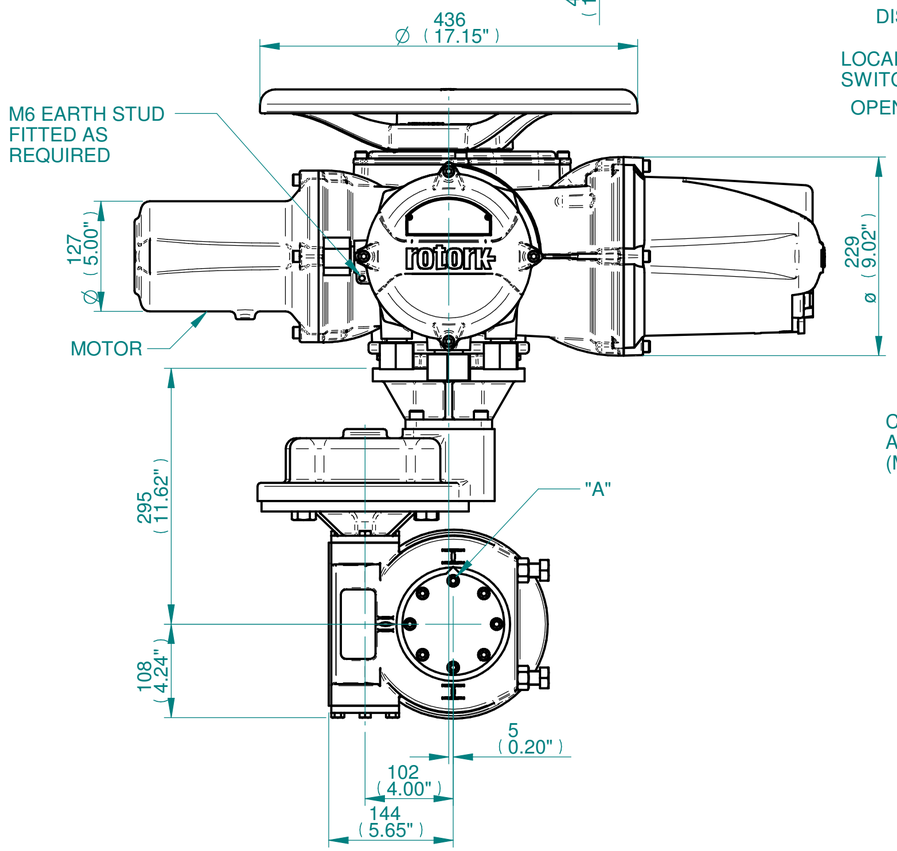

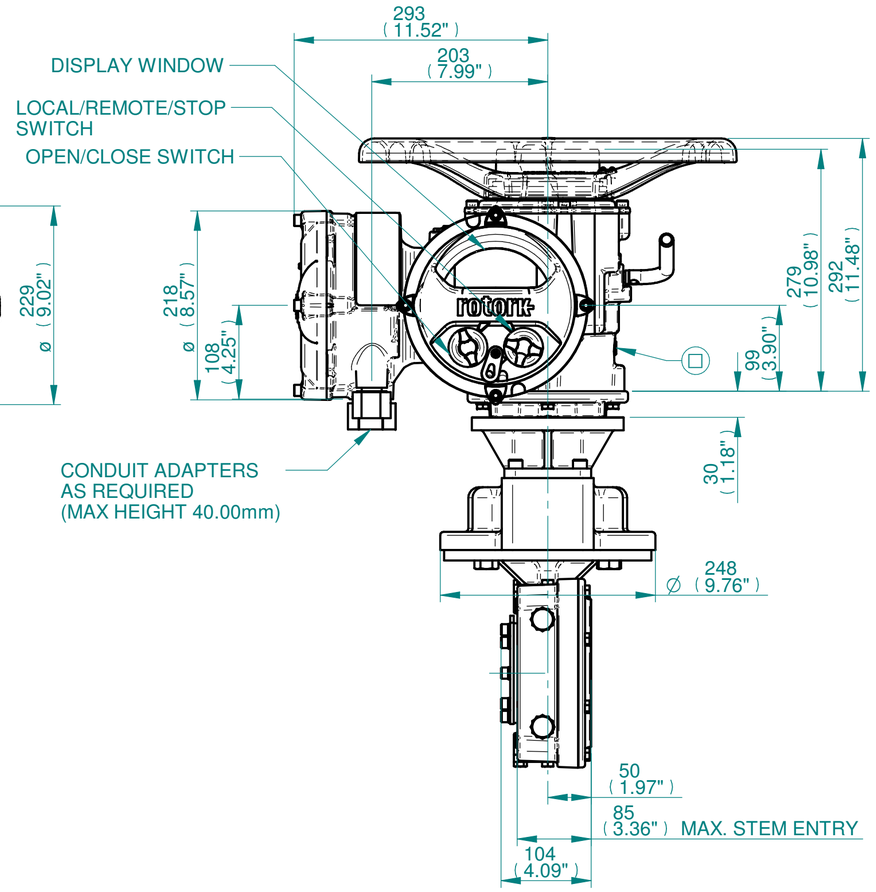

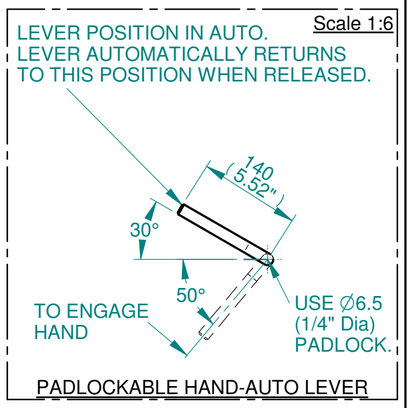

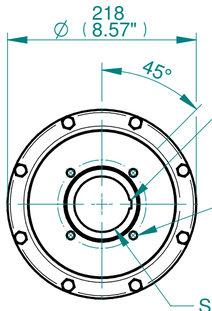

N.B. KEYWAY POS. CAN BE MOVED IN 45° STEPS BY REMOVING 8 SCREWS MARKED "A" AND ROTATING OUTPUT SLEEVE

SEE GEARBOX OUTPUT FLANGE OPTIONS TABLE

SEE MAXIMUM BORE & KEY TABLE

3D Models are available in various formats under the same drawing number

Actuator Size: IQ 20/25 IW4RH/MOW4RH

Title IQ20/25, TOP HANDWHEEL, IW4RH / MOW4RH, F/FA10,12 & 14, Ratios 200 - 420:1 Installation Details

Drawn TED Checked NJC Date 22-AUG-14

Ref SALES Project Ref QUOTATION

Gearbox output flange options

Designation	F10	F12	F14	-	FA10	FA12	FA14	-
No. Holes	4	4	4	-	4	4	4	-
Hole size	M10	M12	M16	-	3/8" UNC	1/2" UNC	5/8" UNC	-
PCD	102	125	140	-	4"	4.95"	5.5"	-

Maximum Bore & Key

Key form	∅ Bore	Key size
Rectangle (BS4235)	64	18 X 11
Rectangle (ANSI B17.1)	2-1/2"	5/8 X 7/16"
Square (ANSI B17.1)	2-1/4"	1/2" SQ

rotork
www.rotork.com
Rotork Controls Limited
Bath, BA1 3JQ, England.
Telephone 01225-733200

Issue	Description
4	OUTPUT FLANGE CHANGE

Scale: 1:5 THIRD ANGLE PROJECTION

A2 | Drawing Number: II2THWIW4RHSTD | Issue No: 4 | Sheet No: 1 of 1