E-FLANGE INPUT DETAILS							MOUNTING HOLES - BOLT CIRCLE (OFF CENTRES)			STEM ACCEPTANCE IN ACCORDANCE TO STANDARD							
INPUT FLANGE	FLANGE O/DIA. + THICKNESS	SHAFT DIA.	RECESS DIA.	RECESS DEPTH	HOLE DETAILS (45° OFF CENTRES)	KEY DETAILS	ISO 5211 / MSS SP-101 MOUNTING OPTION	HOLE DETAILS (22.5°OFF CENTRES)	SPIGOT DIAMETER	MAX SCREW STEM ACCEPTANCE	STANDARD	MIN BORE	SQ KEY MAX BORE	SQ KEY SIZE	RECT. KEY MAX BORE	RECT. KEY SIZE	SQ BORE MAX
-	Ø126x11 (Ø4.96"x0.41")	19.98-0.05 (0.787"-0.002")	Ø70.05+0.05 (Ø2.758"+0.002")	3 (0.12")	4 x Ø10.5 ON Ø102.0 P.C. (4 x Ø0.41" ON Ø4.02" P.C.)	6x6x40 (0.24"x0.24"x1.57")	F25	8 x M16 x 20 (0.79") DEEP ON Ø254.0 (Ø10.00") P.C.	Ø199.95-0.05 (Ø7.872"-0.002")	86 (3.386")	BS4235	-	-	-	76.0	22 x 14	□ 61.0 (2.402")
											BS46	-	2.750"	3/4" SQ.	3.000"	3/4" x 1/2"	
							FA25	8 x 5/8" UNC x 20 (0.79") DEEP ON Ø254.4 (Ø10.00") P.C.	Ø152.25-0.05 (Ø5.994"-0.002")		ANSI B17.1	-	2.750"	3/4" SQ.	3.000"	3/4" x 1/2"	
											DIN 6885	-	-	-	-	-	

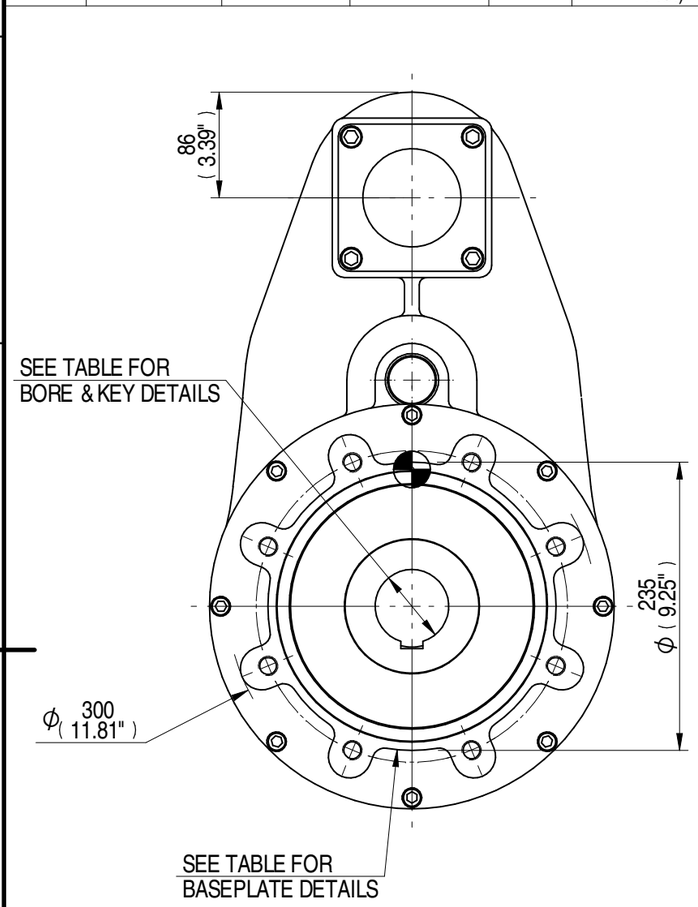

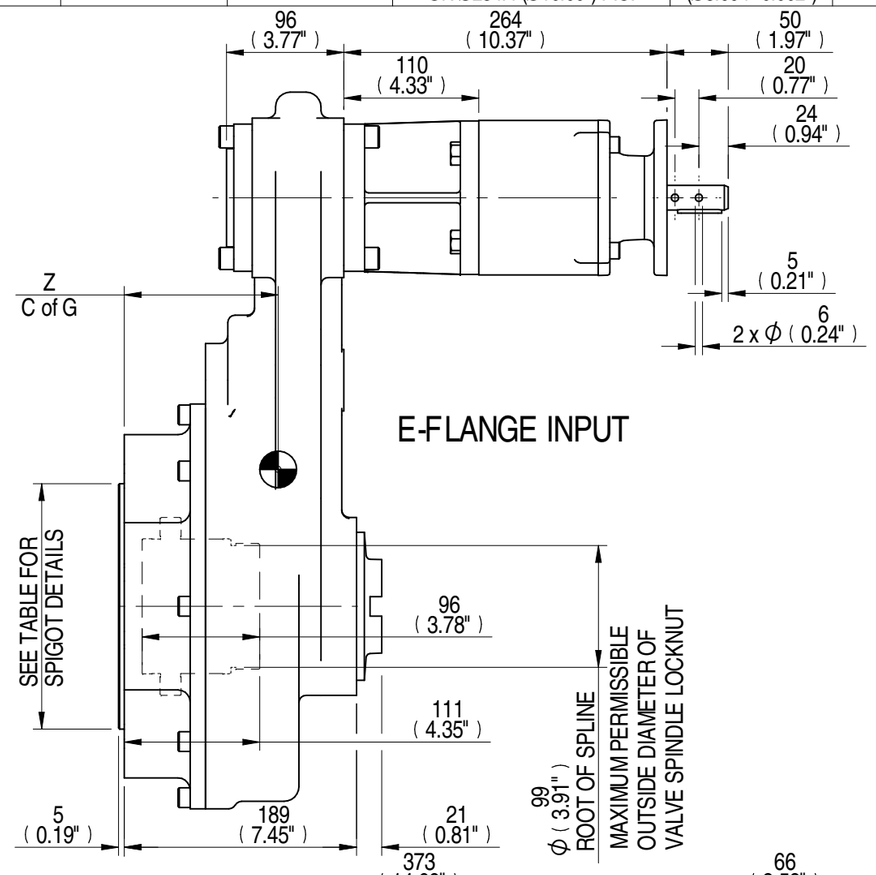

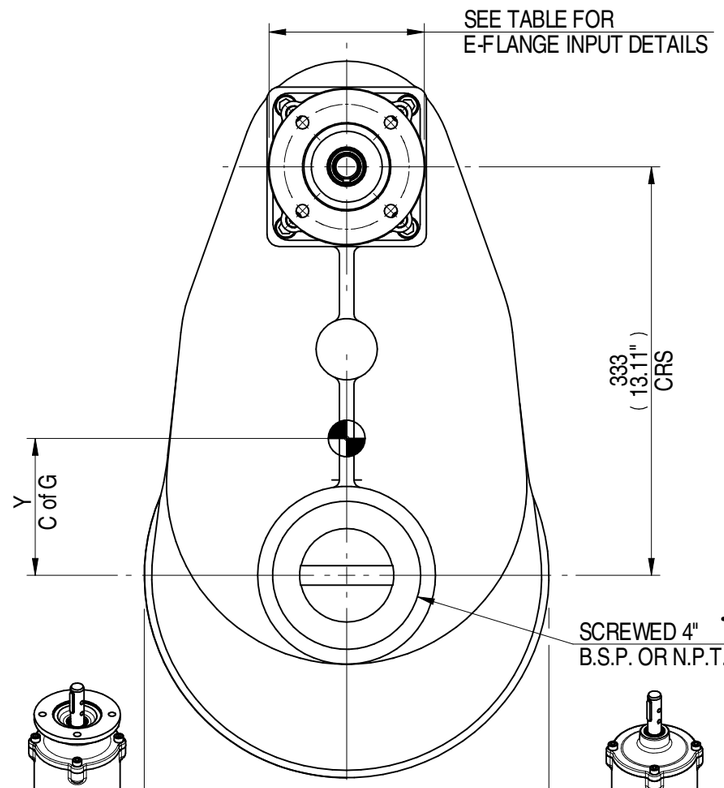

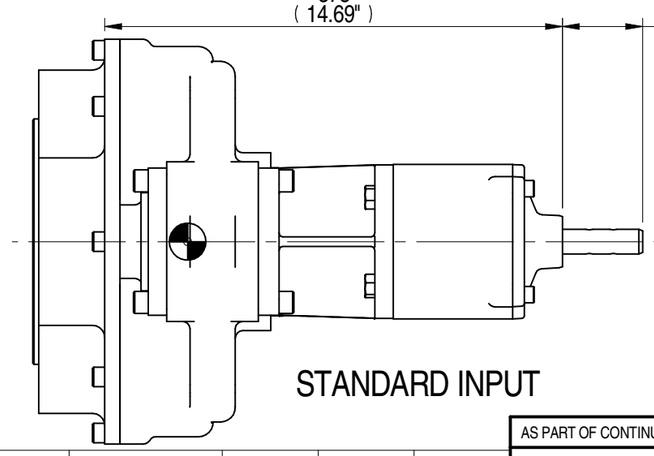

STANDARD INPUT

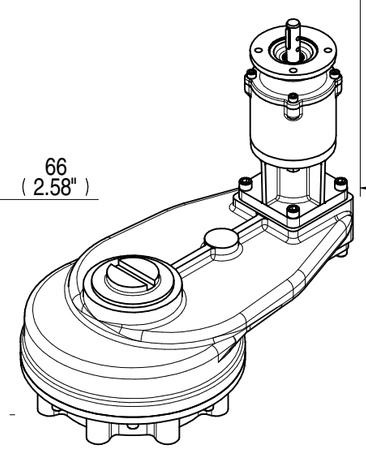

E-FLANGE INPUT ISOMETRIC VIEW 1:9

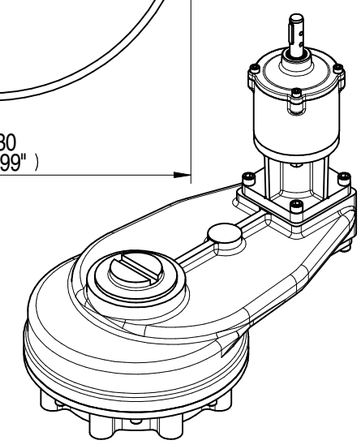

STANDARD INPUT ISOMETRIC VIEW 1:9

NOTES:
1. * THREAD DEPTH DOES NOT MATCH ISO STANDARD
2. CENTRE OF GRAVITY POSITION IS INDICATIVE FOR STANDARD BUILD WHEN IN POSITION SHOWN
3. MPR IS NOT SUITABLE FOR MOTORISED APPLICATIONS

PLAN VIEW OF GEARBOX IN CLOSED POSITION SHOWING STANDARD KEYWAY POSITIONS. ALTERNATIVES AVAILABLE ON REQUEST

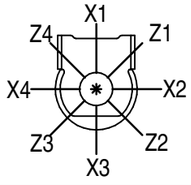

33.2	25.40	84.35	2550	100	0	112	125
RATIO	M.A.	WEIGHT	MAX OUTPUT	MAX INPUT	X	Y	Z
DESCRIPTION			TORQUE		CENTRE OF GRAVITY		

AS PART OF CONTINUOUS PRODUCT DEVELOPMENT, ALL DETAILS SUBJECT TO CHANGE WITHOUT PRIOR NOTICE. FOR UP TO DATE DETAILS PLEASE VISIT www.rotork.com

rotork® Gears
LEEDS - UK
www.rotork.com

This drawing is confidential and is the property of Rotork Gears and must not be reproduced either wholly or partly. All rights in respect of patents, designs and copyrights are reserved. © 2015

Document Type PUBLICITY		Mass 84.35 kg	Title HOS9 8:1 MPR4 GEARBOX STANDARD/E-FLANGE INPUT REDUCER, F25/FA25 OUTPUT.
		Dimensions in mm Scale 1:5	
Created	E CHANG	23/02/2015	Drawing Number PUB-HOS9MPR4-33.2-F25 — Iss. 01
Checked	J DICKINSON	13/03/2015	
Approved			Sheet 1 of 1 — Size A3

Rev 04