E-FLANGE INPUT DETAILS							MOUNTING HOLES - BOLT CIRCLE (OFF CENTRES)			STEM ACCEPTANCE IN ACCORDANCE TO STANDARD							
INPUT FLANGE	FLANGE O/DIA. + THICKNESS	SHAFT DIA.	RECESS DIA.	RECESS DEPTH	HOLE DETAILS (OFF CENTRES)	KEY DETAILS	ISO 5211 / MSS SP-101 MOUNTING OPTION	HOLE DETAILS (45°OFF CENTRES)	SPIGOT DIAMETER	MAX SCREW STEM ACCEPTANCE	STANDARD	MIN BORE	SQ KEY MAX BORE	SQ KEY SIZE	RECT. KEY MAX BORE	RECT. KEY SIZE	SQ BORE MAX
-	Ø126x11 (Ø4.96"x0.41")	19.98-0.05 (0.787"-0.002")	Ø70.05+0.05 (Ø2.758"+0.002")	3 (0.12")	4 x Ø10.5 ON Ø102.0 P.C. (4 x Ø0.41" ON Ø4.02" P.C.)	6x6x40 (0.24"x0.24"x1.57")	F14	4 x M16 x 20 (0.79") DEEP ON Ø140.0 (Ø5.51") P.C.	Ø99.95-0.05 (Ø3.935"-0.002")	55 (2.125")	BS4235	-	-	-	52.0	16 x 10	□ 35.5 (1.398")
											BS46	-	1.875"	1/2" SQ.	2.000"	1/2" x 5/16"	
							FA14	4 x 5/8" UNC x 20 (0.79") DEEP ON Ø139.7 (Ø5.50") P.C.	Ø95.22-0.10 (Ø3.749"-0.004")		ANSI B17.1	-	1.875"	1/2" SQ.	2.000"	1/2" x 3/8"	
											DIN 6885	-	-	-	-	-	

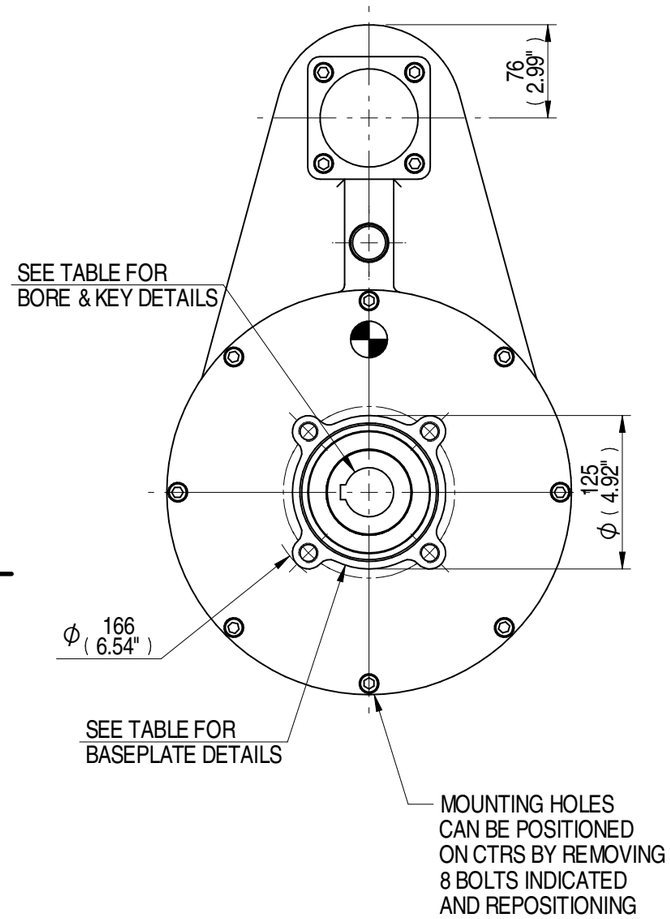

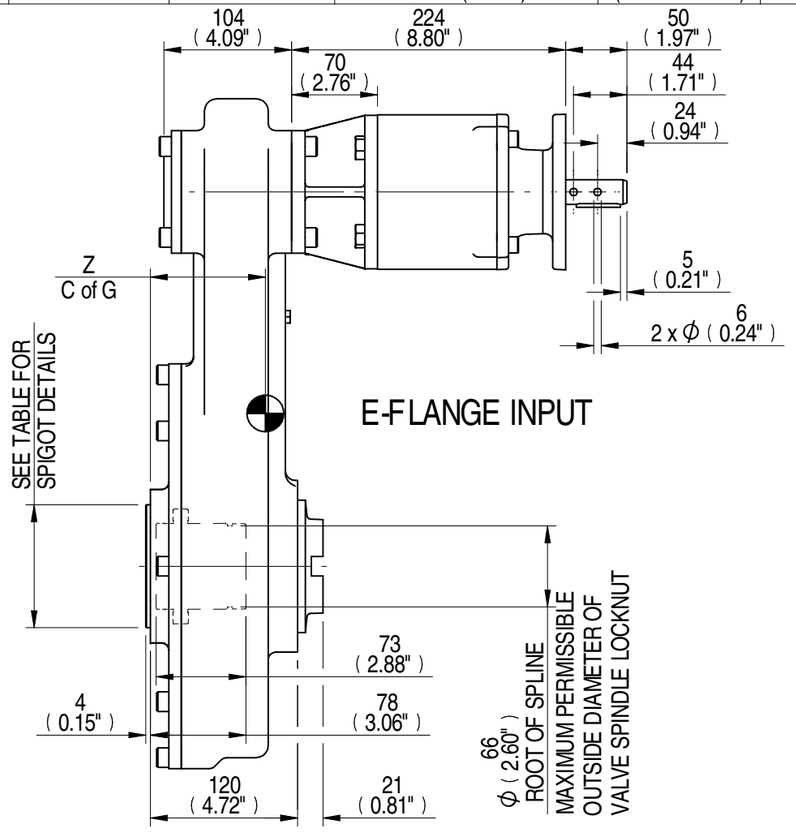

E-FLANGE INPUT

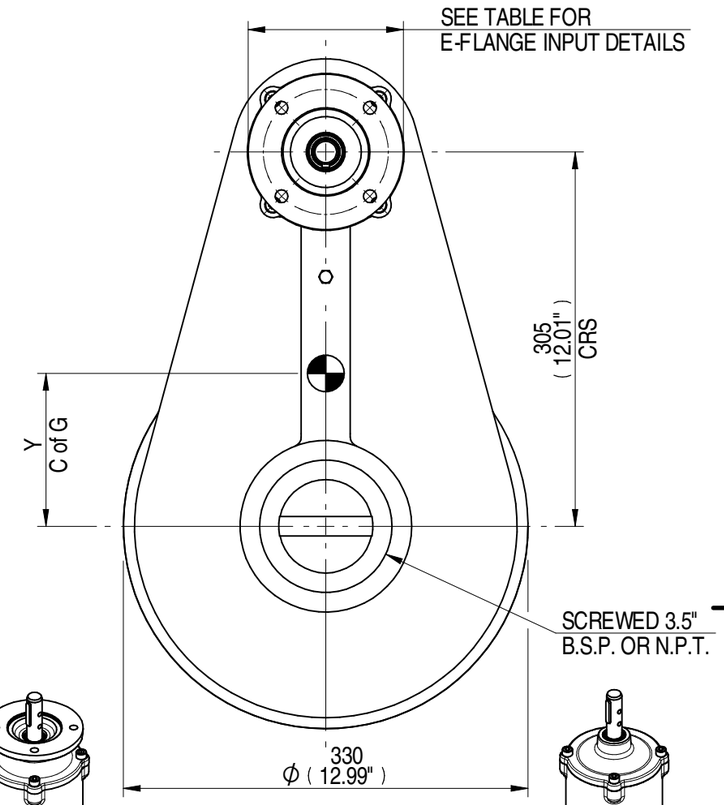

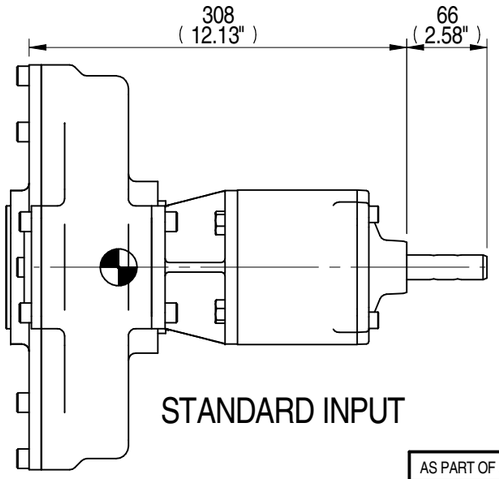

STANDARD INPUT

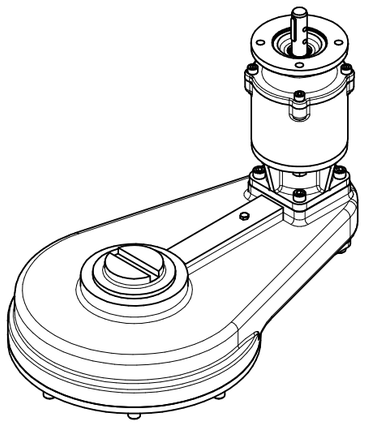

E-FLANGE INPUT ISOMETRIC VIEW 1:8

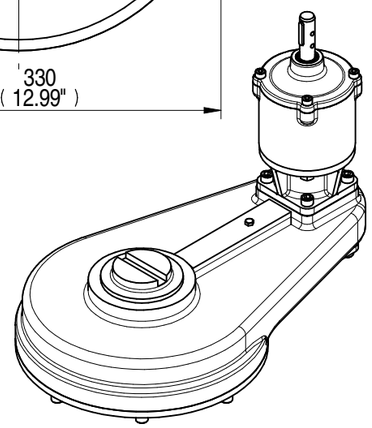

STANDARD INPUT ISOMETRIC VIEW 1:8

NOTES:
1. * THREAD DEPTH DOES NOT MATCH ISO STANDARD
2. CENTRE OF GRAVITY POSITION IS INDICATIVE FOR STANDARD BUILD WHEN IN POSITION SHOWN
3. MPR IS NOT SUITABLE FOR MOTORISED APPLICATIONS

PLAN VIEW OF GEARBOX IN CLOSED POSITION SHOWING STANDARD KEYWAY POSITIONS. ALTERNATIVES AVAILABLE ON REQUEST

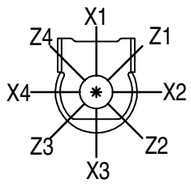

DESCRIPTION			TORQUE		CENTRE OF GRAVITY		
RATIO	M.A.	WEIGHT	MAX OUTPUT	MAX INPUT	X	Y	Z
16.7	12.80	50.19	1700	133	0	125	94
25.1	19.20	50.67	1700	89	0	125	94

AS PART OF CONTINUOUS PRODUCT DEVELOPMENT, ALL DETAILS SUBJECT TO CHANGE WITHOUT PRIOR NOTICE. FOR UP TO DATE DETAILS PLEASE VISIT www.rotork.com

rotork® Gears
LEEDS - UK
www.rotork.com

This drawing is confidential and is the property of Rotork Gears and must not be reproduced either wholly or partly. All rights in respect of patents, designs and copyrights are reserved. © 2015

Document Type PUBLICITY		Mass 50.67 kg	Title HOS6 4:1 MPR4 GEAR BOX STANDARD/E-FLANGE INPUT REDUCER, F14/FA14 OUTPUT
		Dimensions in mm Scale 1:5	
Created	E CHANG	18/02/2015	Drawing Number PUB-HOS6MPR4-F14 — Iss. 01
Checked	J DICKINSON	12/03/2015	
Approved			Sheet 1 of 1 — Size A3

Rev 04