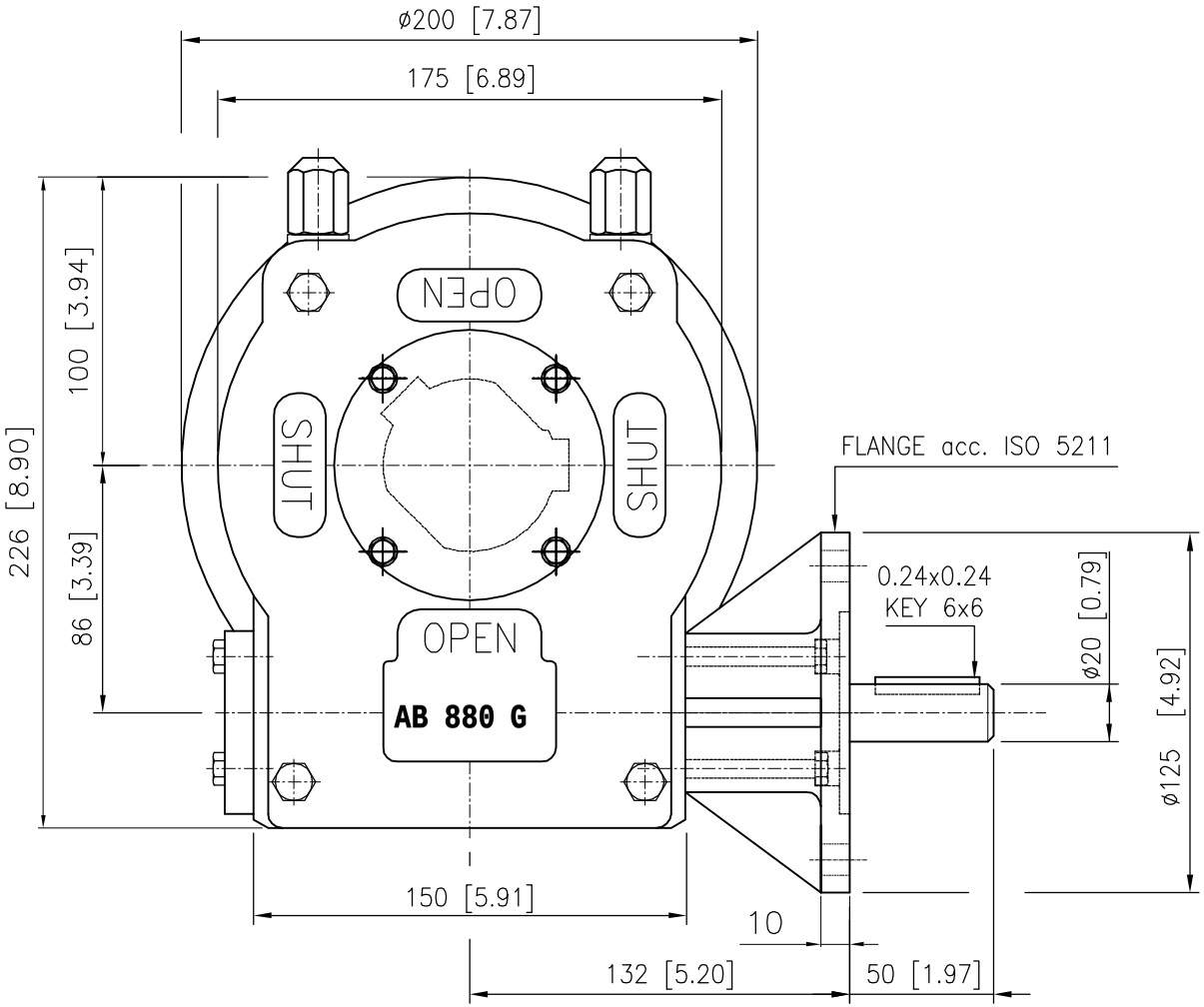


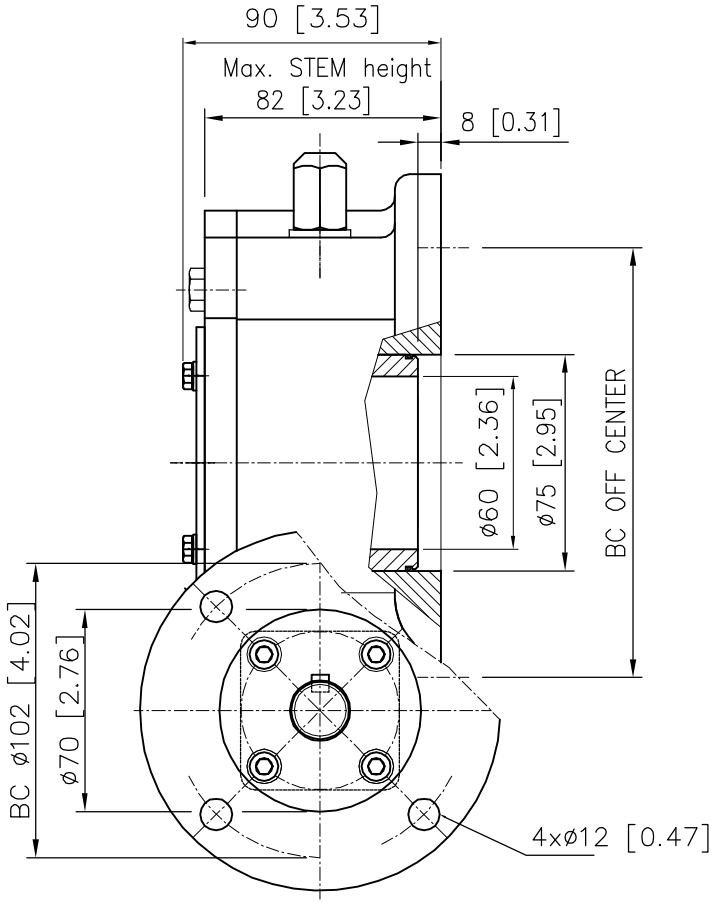


Suitable for insert 150 serie

## DESCRIPTION

TRAVEL : −5° to 95° adjustable
RATIO : 38 : 1
TURNS TO CLOSE : 9,5
WEIGHT : 14 kg.(31 lb.) excl.handwheel

## MOUNTINGHOLES

BOLT CIRCLE : min. ø102 [4.02]
(OFF CENTER) max. ø165 [6.50]
acc. ISO 5211 : F10−F12−F14−F16
BORE : min.16[0.63] max.ø44[1.77] #36[1.42]

## TORQUE

max.OUTPUT : 2000 Nm (17701 lbf.in.)
max.INPUT : 152 Nm (1341 lbf.in.)
M.A. : 13.2 ±15%

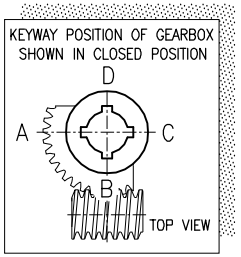


Dimensions in MM [inch]

rotork gears
Nijverheidstraat 25
7581 PV Losser
The Netherlands

# GEARBOX E 880G F10 BU L

THIS DOCUMENT IS PROPERTY OF ROTORK GEARS, NEITHER THIS OR ITS CONTENT MAY BE COPIED OR USED IN ANY OTHER WAY DETRIMETAL TO THE INTEREST OF ROTORK GEARS, ACCEPTANCE OF THIS DOCUMENT SHALL CONSTITUTE ACKNOWLEDGEMENT OF THE FOREGOING CONDITIONS

Drawn : P.vH Date : 28-01-09
Dwg Nr.: E 880GI F10 BU L Rev.: 01

Contents Subject to change without notice.