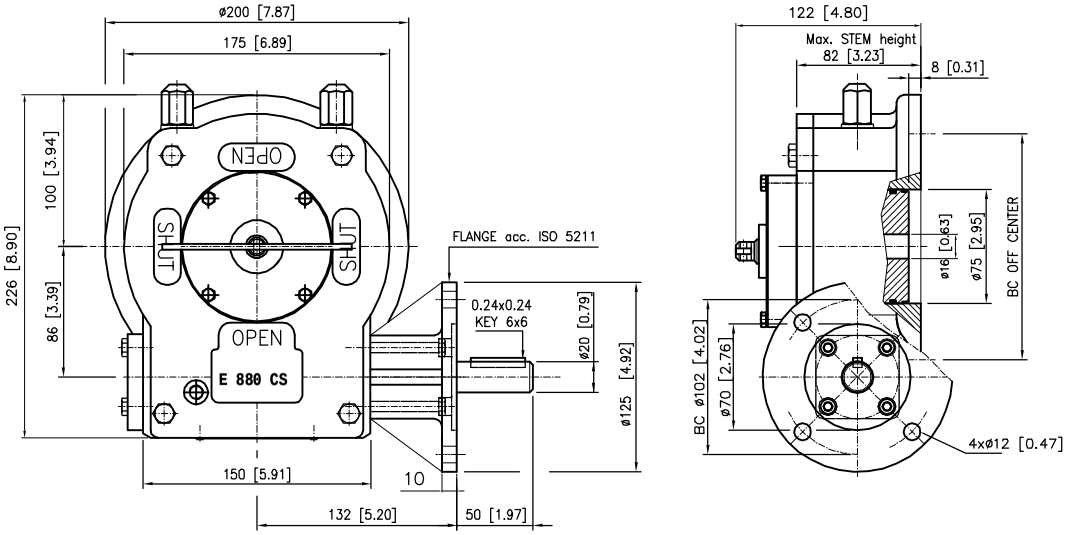

MOVING INDICATOR

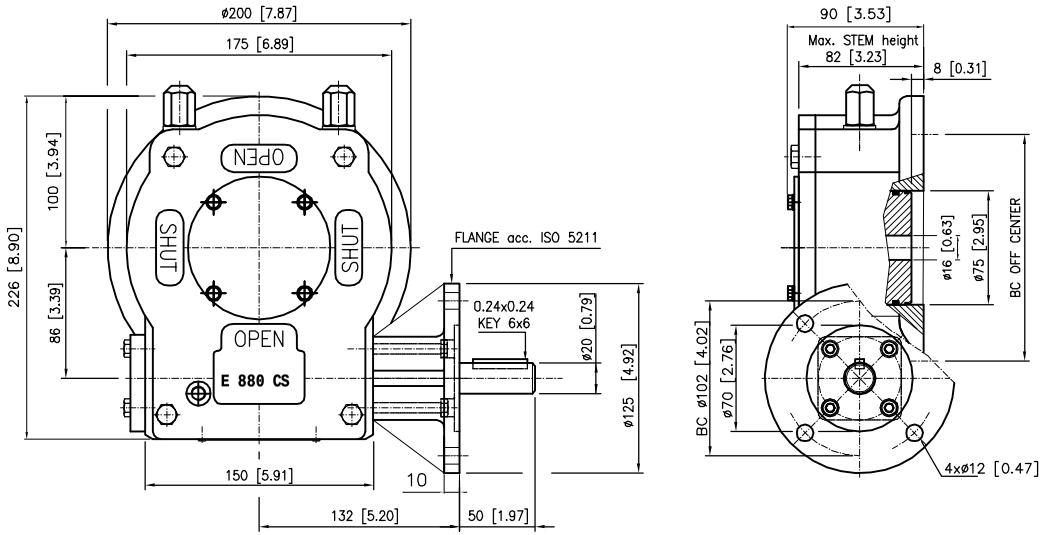

NON MOVING INDICATOR

DESCRIPTION

TRAVEL : −5° to 95° adjustable
RATIO : 38 : 1
TURNS TO CLOSE : 9,5
WEIGHT : 14 kg.(31 lb.) excl.handwheel

MOUNTINGHOLES

BOLT CIRCLE : min. ø102 [4.02]
(OFF CENTER) max. ø165 [6.50]
acc. ISO 5211 : F10−F12−F14−F16
BORE : min.16[0.63] max.ø60[2.36] #46[1.81]

TORQUE

max.OUTPUT : 2000 Nm (17701 lbf.in.)
max.INPUT : 152 Nm (1341 lbf.in.)
M.A. : 13.2 ±15%

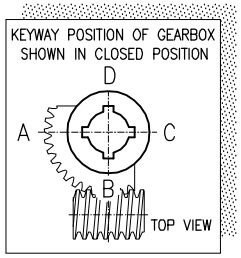

Dimensions in MM [inch]

rotork gears
Nijverheidstraat 25
7581 PV Losser
The Netherlands

GEARBOX E 880CS F10 L

THIS DOCUMENT IS PROPERTY OF ROTORK GEARS, NEITHER THIS OR ITS CONTENT MAY BE COPIED OR USED IN ANY OTHER WAY DETRIMETAL TO THE INTEREST OF ROTORK GEARS, ACCEPTANCE OF THIS DOCUMENT SHALL CONSTITUTE ACKNOWLEDGEMENT OF THE FOREGOING CONDITIONS

Drawn : B.H Date : 20-07-2011
Dwg Nr.: E 880CS F10 L Rev.: 00

Contents Subject to change without notice.