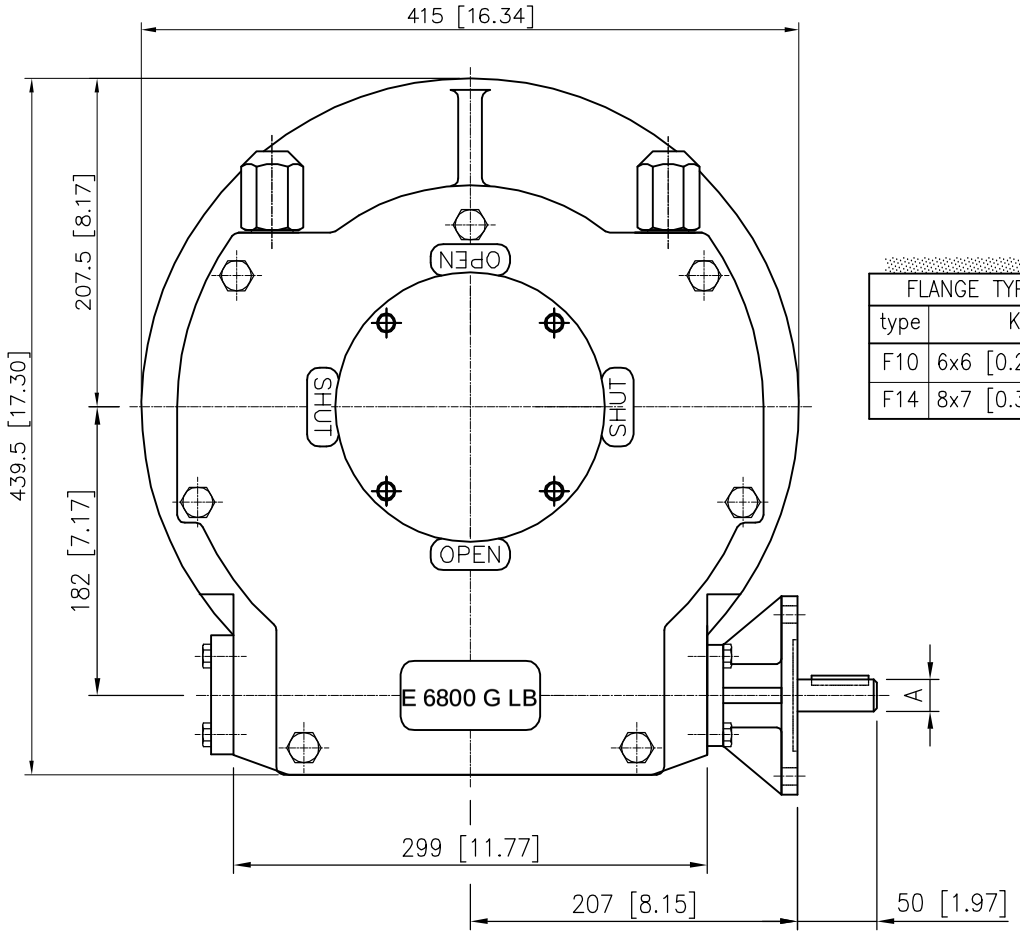

FLANGE TYPE acc. ISO 5211		
type	KEY	A
F10	6x6 [0.24x0.24]	ø20[0.79]
F14	8x7 [0.35x0.28]	ø30[1.18]

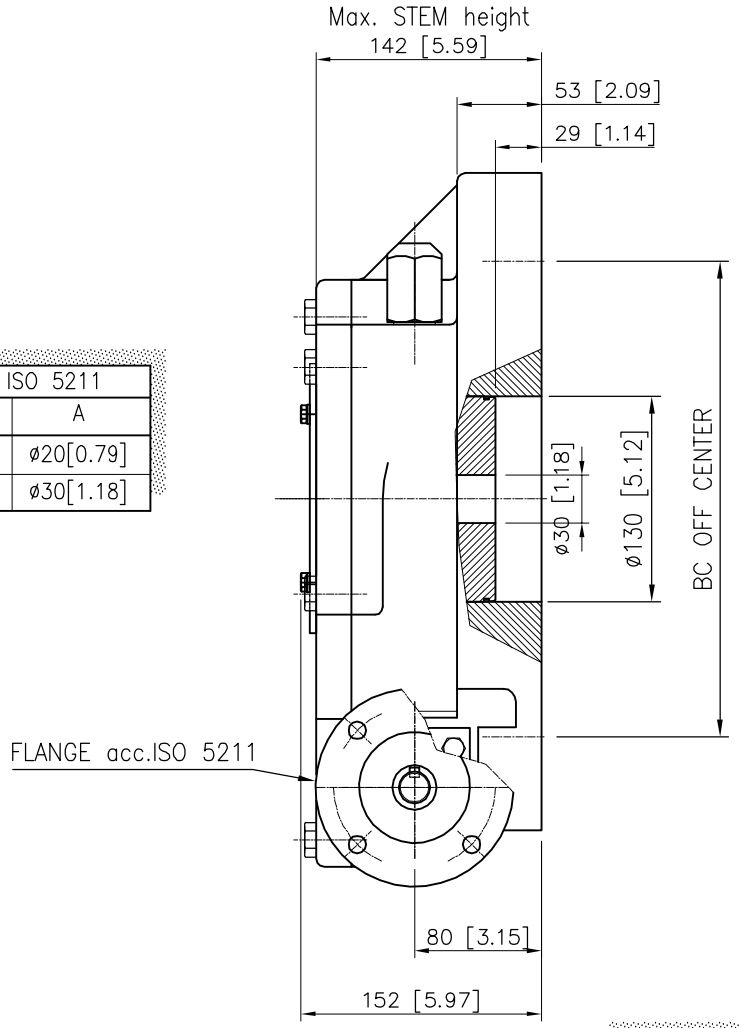

DESCRIPTION

TRAVEL : 90° ±5° AT BOTH ENDS.
RATIO : 78 : 1
TURNS TO CLOSE : 19,5
WEIGHT : 86.9kg.(192 lb.) excl.handwheel

MOUNTINGHOLES

BOLT CIRCLE : min. ø165 [6.50]
(OFF CENTER) max. ø356 [14.02]
acc. ISO 5211 : F16–F25–F30–F35
BORE : min.30[1.18] max.ø100[3.94] #75[2.95]

TORQUE

max.OUTPUT : 8400 Nm (74346 lbf.in.)
max.INPUT : 305 Nm (2704 lbf.in.)
M.A. : 27.5 ±15%

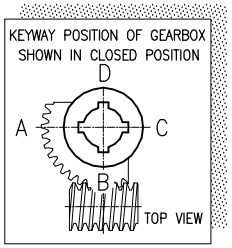

Dimensions in MM [inch]

rotork gears
Nijverheidstraat 25
7581 PV Losser
The Netherlands

GEARBOX E 6800G F10-F14 BU LB

THIS DOCUMENT IS PROPERTY OF ROTORK GEARS, NEITHER THIS OR ITS CONTENT MAY BE COPIED OR USED IN ANY OTHER WAY DETRIMETAL TO THE INTEREST OF ROTORK GEARS, ACCEPTANCE OF THIS DOCUMENT SHALL CONSTITUTE ACKNOWLEDGEMENT OF THE FOREGOING CONDITIONS

Drawn : P.vH Date : 28-01-09
Dwg Nr.: E 6800G F10-F14 BU LB Rev.: 01

Contents Subject to change without notice.

PDF created with pdfFactory Pro trial version www.pdffactory.com