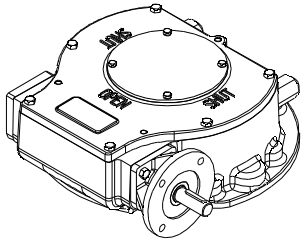

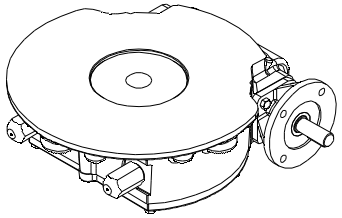

KEYWAY POSITION OF GEARBOX SHOWN IN CLOSED POSITION

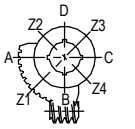

TOP VIEW

DESCRIPTION				MOUNTING HOLES - BOLT CIRCLE (OFF CENTRES)				BORE; STEM ACCEPTANCE WITH KEYWAY IN ACCORDING WITH STANDARD			TORQUE		
RATIO	TURNS TO CLOSE	TRAVEL (1/4 TURN)	WEIGHT	NR of HOLES	MIN ENVELOPE PCD - ØHOLE	MAX ENVELOPE PCD + ØHOLE	ACCORDING TO ISO 5211 / MSS SP-101	MIN	MAX	STANDARD	OUTPUT	INPUT	MA
58:1	14.5	-5° TO 95°	50 kg	4	Ø275 mm	Ø318 mm	-	Ø35 mm	Ø100 mm ☐75 mm	ISO 773 A	7000 Nm	305 Nm	23 ± 15%
				8	Ø275 mm	Ø318 mm	F30						
			110 lb	4	Ø10.83 inch	Ø12.52 inch	-	Ø1.38 inch	Ø3.94 inch ☐2.95 inch	ANSI B17.1	61.950 lbf.in	2699 lbf.in	
				8	Ø10.83 inch	Ø12.52 inch	FA30						

AS PART OF CONTINUOUS PRODUCT DEVELOPMENT, ALL DETAILS SUBJECT TO CHANGE WITHOUT PRIOR NOTICE. FOR UP TO DATE DETAILS PLEASE VISIT www.rotork.com

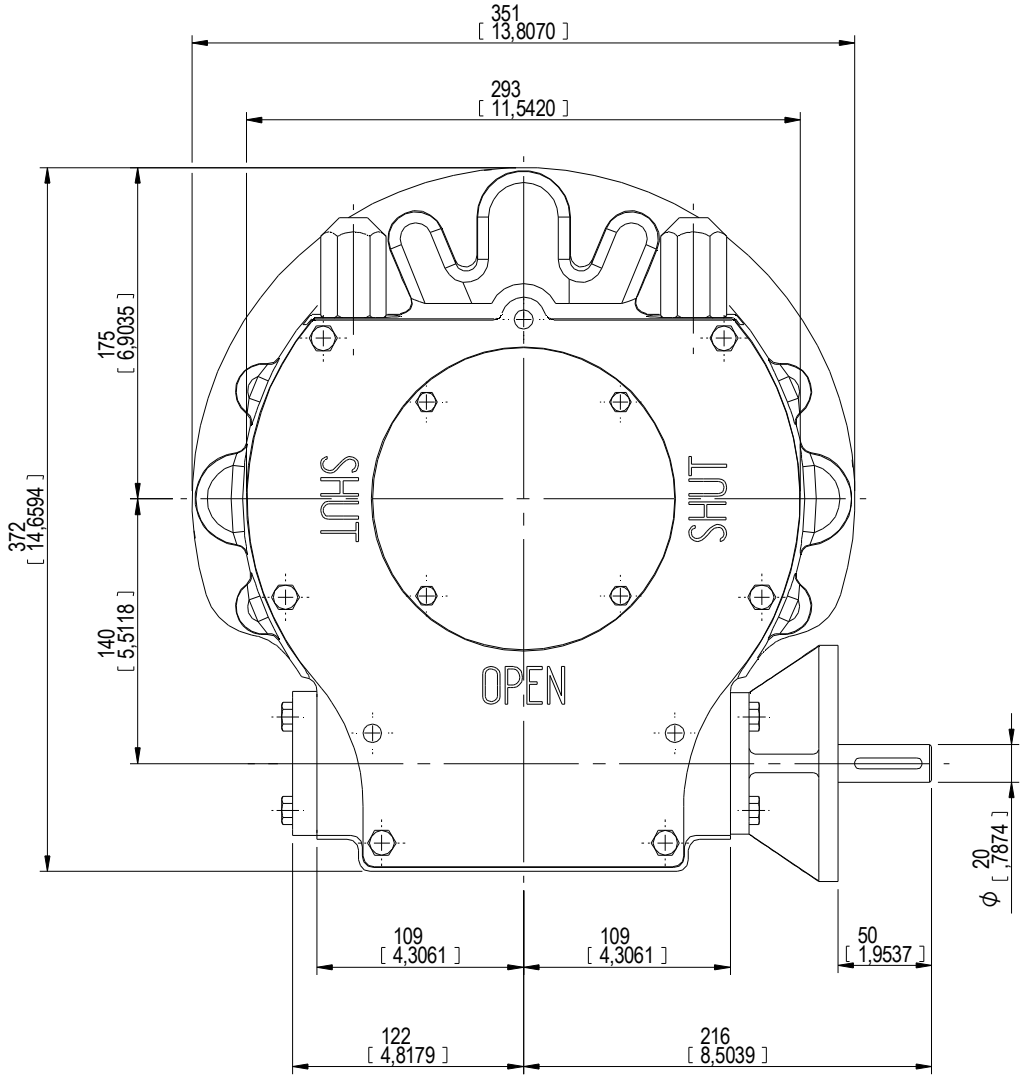

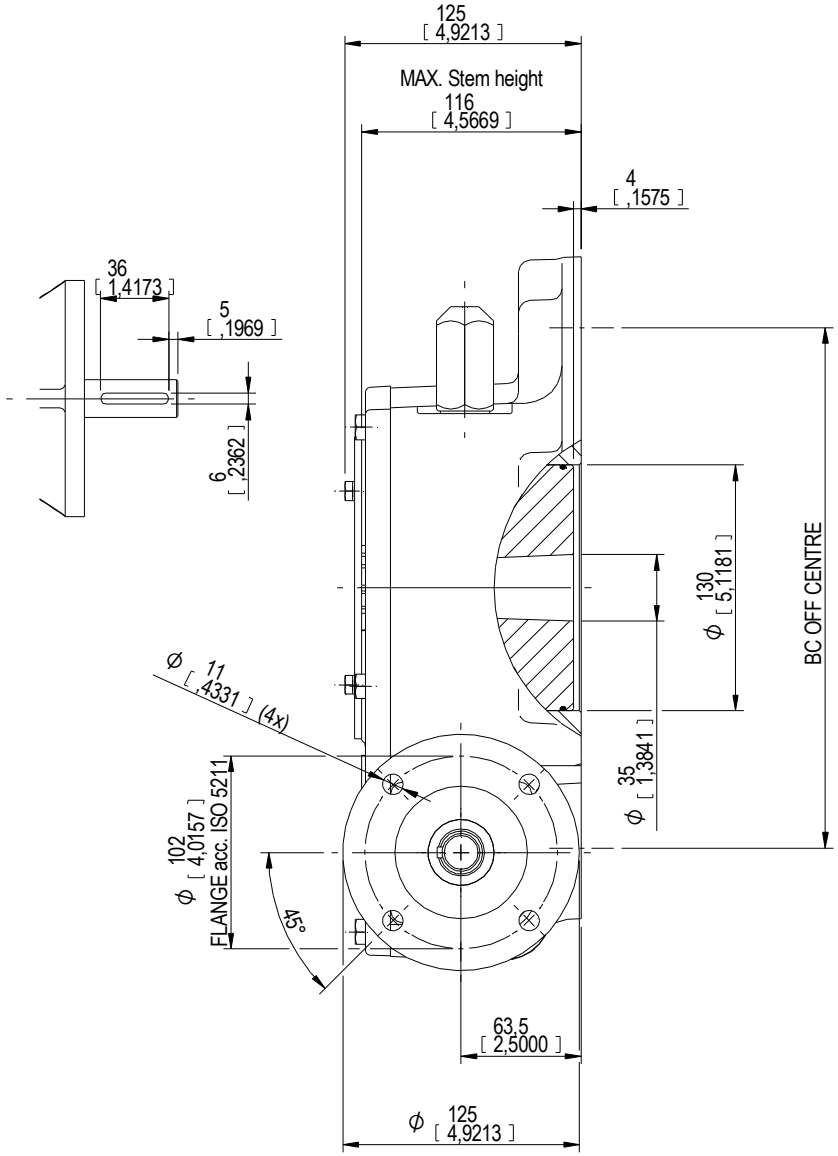

rotork® Gears
LOSSER - THE NETHERLANDS
www.rotork.com

This drawing is confidential and is the property of Rotork Gears and must not be reproduced either wholly or partly. All rights in respect of patents, designs and copyrights are reserved, © 2013

Document type	DETAIL DRAWINGS		Title: GEARBOX E 3000 G BURIED LARGE BASE
	Dimensions in mm [inch]		
	Scale 1:2		
Created	Robbin.Goosen	11-4-2013	Drawing Number: AB-00233-OUT-1
Checked	Henk Hoff	11-4-2013	Rev: 00
Approved	Henk Hoff	11-4-2013	Sheet 1 of 1 Size A2

Rev 01