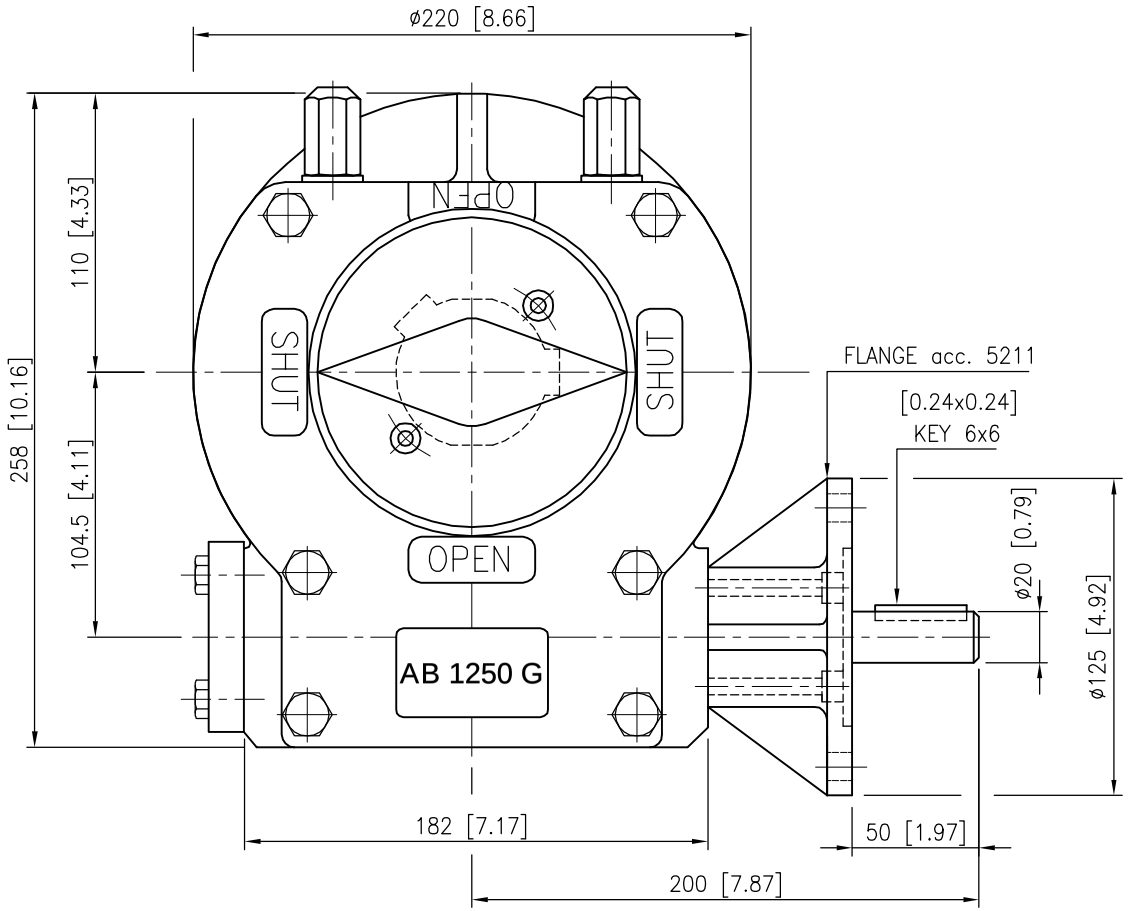

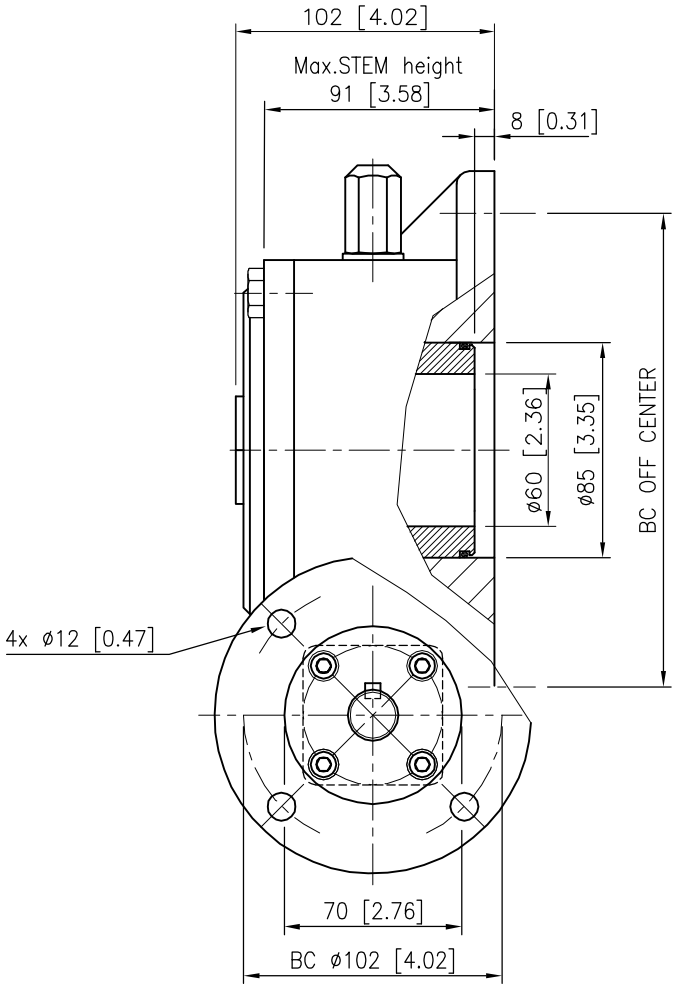

Suitable for 150 series insert

DESCRIPTION

TRAVEL : 90° ±5° AT BOTH ENDS.
RATIO : 55 : 1
TURNS TO CLOSE : 13.75
WEIGHT : 22 kg.(48.5 lb.) excl.handwheel

MOUNTINGHOLES

BOLT CIRCLE : min. ø102 [4.02]
(OFF CENTER) max. ø165 [6.50]
acc. ISO 5211 : F10–F12–F14–F16
BORE : min.ø16[0.63] max.ø45[1.77] #36[1.42]

TORQUE

max.OUTPUT : 3250 Nm (28765 lbf.in.)
max.INPUT : 171 Nm (1514 lbf.in.)
M.A. : 19 ±15%

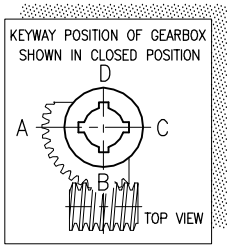

Dimensions in MM [inch]

rotork gears
Nijverheidstraat 25
7581 PV Losser
The Netherlands

GEARBOX E 1250 G / F10

THIS DOCUMENT IS PROPERTY OF ROTORK GEARS, NEITHER THIS OR ITS CONTENT MAY BE COPIED OR USED IN ANY OTHER WAY DETRIMETAL TO THE INTEREST OF ROTORK GEARS, ACCEPTANCE OF THIS DOCUMENT SHALL CONSTITUTE ACKNOWLEDGEMENT OF THE FOREGOING CONDITIONS

Drawn : N.M Date : 22-06-06
Dwg Nr.: D20GI-001 Rev.: 01

Contents Subject to change without notice.

PDF created with pdfFactory Pro trial version www.pdffactory.com