NO	PART NAME	MATERIAL	Q'TY	REMARK
1	WINDOW	PC	1	
2	TOP COVER	ADC12	1	
3	BODY	ADC12	1	
4	LEVER	SM45C	1	
5	INSERT	FC0208	1	

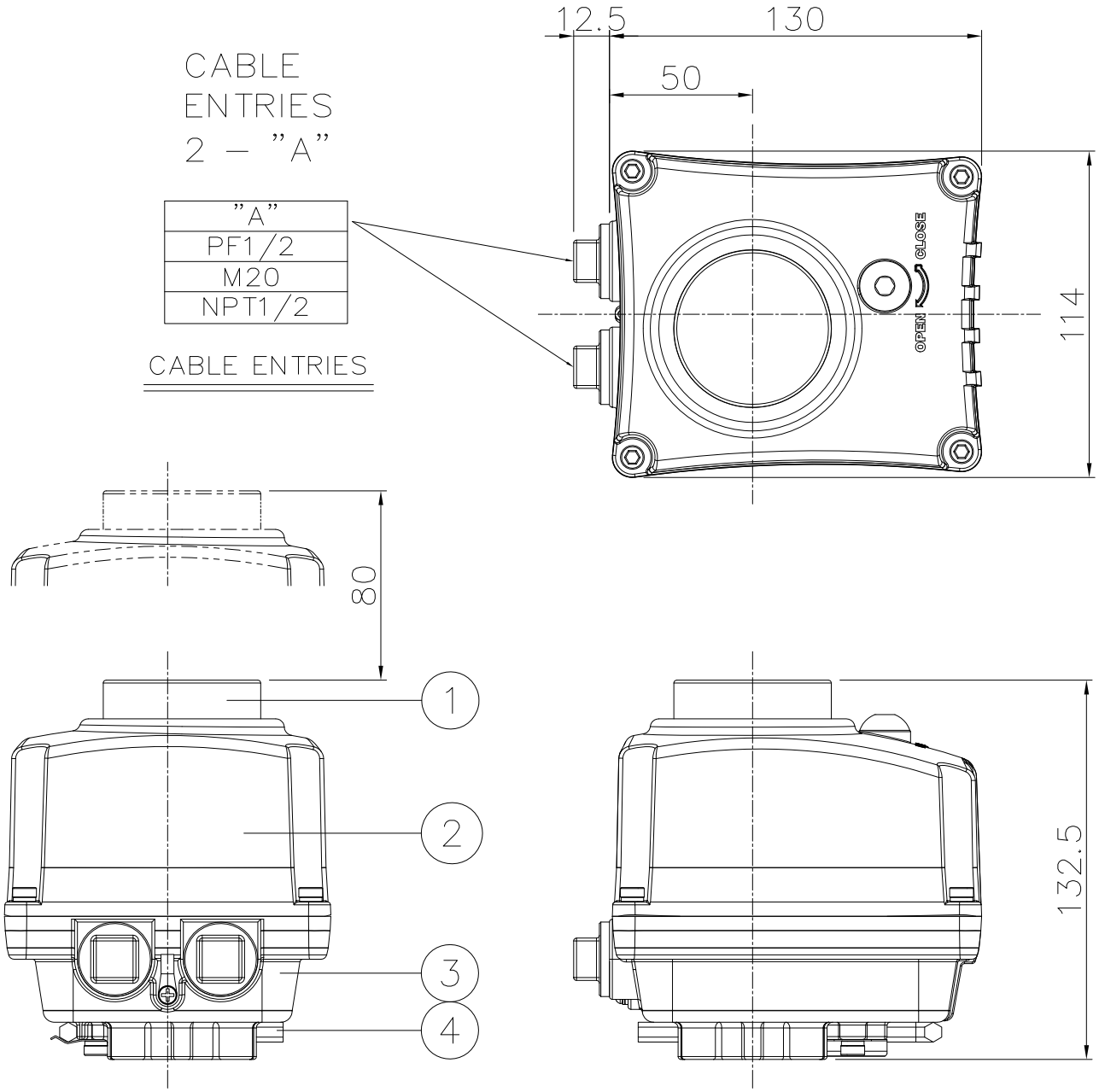

CABLE ENTRIES
2 – "A"

"A"
PF1/2
M20
NPT1/2

CABLE ENTRIES

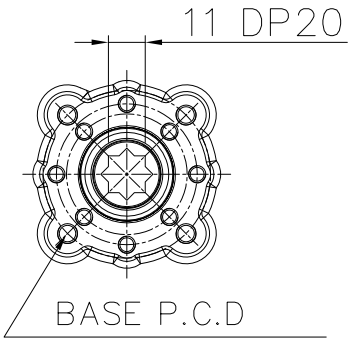

ISO 5211 F03(ø36 M5TAP DP8)
ISO 5211 F04(ø42 M5TAP DP10)
ISO 5211 F05(ø50 M6TAP DP10)

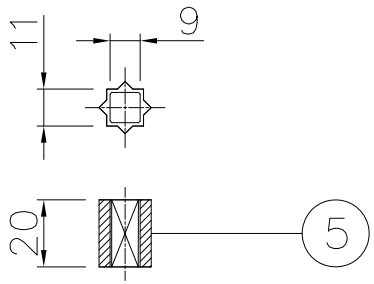

DRIVE INSERT

SA03.1	1
APPLICATION	

DRAW	S.H KYUNG	PROJ.	SCALE 1/1	PART NAME	SA03 ASS'Y
		DIM. mm	DATE 17.02.02		
CHECK	M.Y HWANG	NOAH Actuation		DWG NO.	E003-701-A
APPD		NOAH ACTUATION CO., LTD		1 OF 1 SHEET	DWG SIZE A1