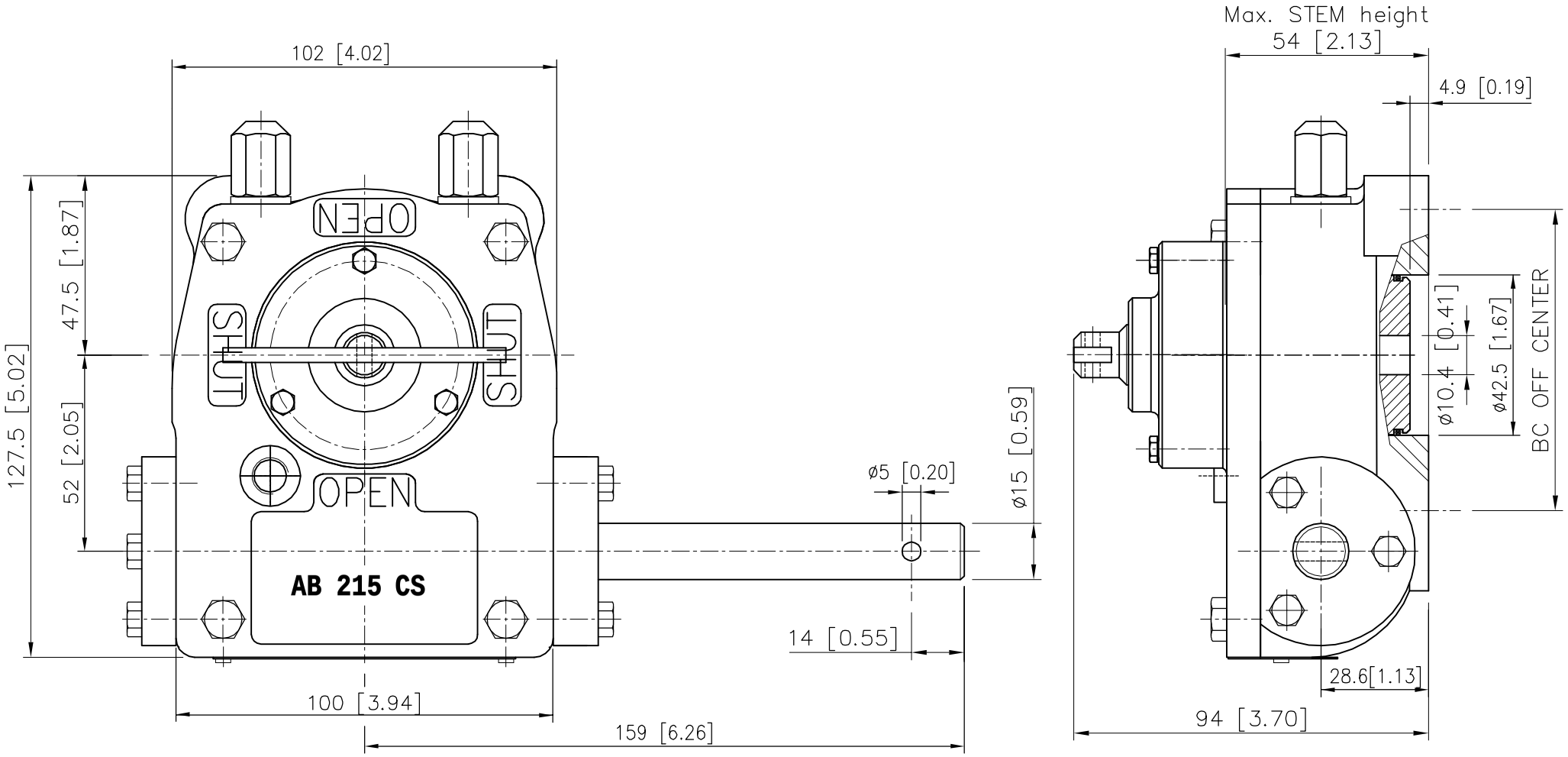


## DESCRIPTION

TRAVEL : −5° to 95° adjustable
RATIO : 37 : 1
TURNS TO CLOSE : 9.25
WEIGHT : 4 kg. (8.8 Lb.) excl.handwheel

## MOUNTINGHOLES

BOLT CIRCLE : min. ø50 [1.97]
(OFF CENTER) max. ø102 [4.02]
acc. ISO 5211 : F05−F07−F10
BORE : min.10.4[0.41] max.ø30[1.18] #24[0.94]

## TORQUE

max.OUTPUT : 500 Nm (4425 lbf.in.)
max.INPUT : 43 Nm (381 lbf.in.)
M.A. : 11.6 ±15%

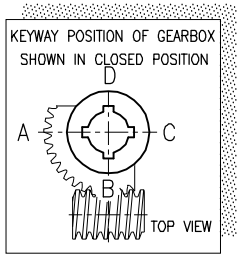


Dimensions in MM [inch]

rotork gears
Nijverheidstraat 25
7581 PV Losser
The Netherlands

# GEARBOX AB 215 CS

THIS DOCUMENT IS PROPERTY OF ROTORK GEARS, NEITHER THIS OR ITS CONTENT MAY BE COPIED OR USED IN ANY OTHER WAY DETRIMETAL TO THE INTEREST OF ROTORK GEARS, ACCEPTANCE OF THIS DOCUMENT SHALL CONSTITUTE ACKNOWLEDGEMENT OF THE FOREGOING CONDITIONS

Drawn : B.H
Date : 18-07-2011
Dwg Nr.: D02CS-011
Rev.: 00

Contents Subject to change without notice.