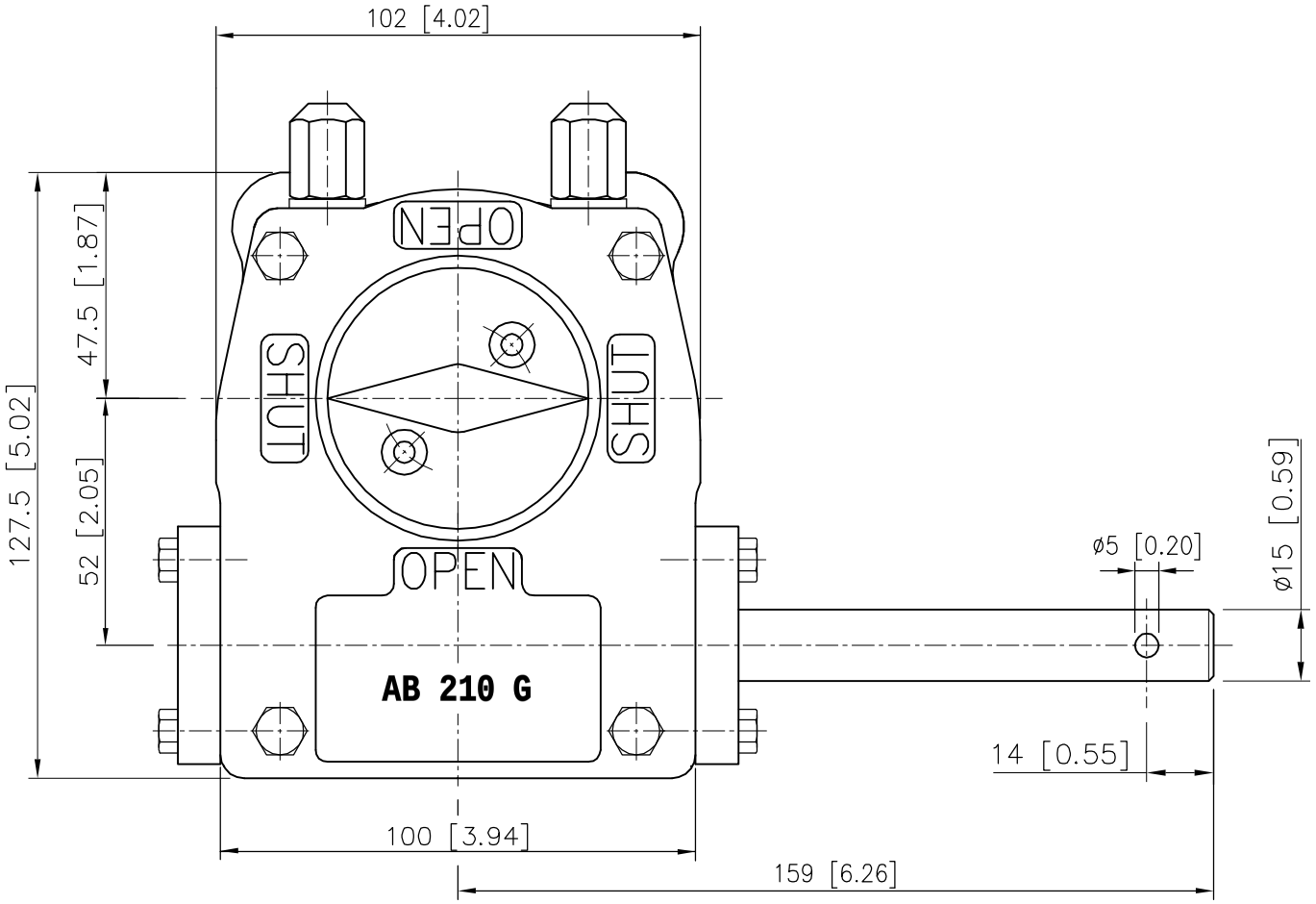

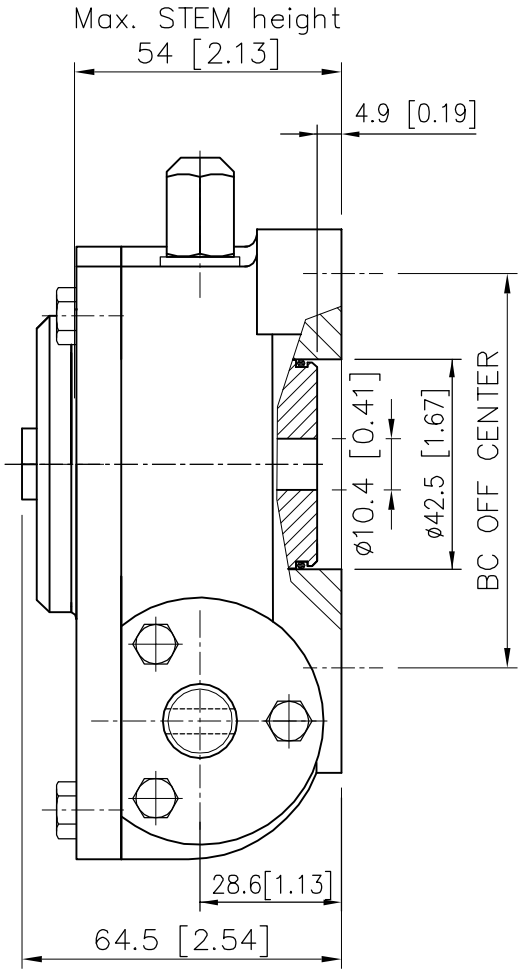

DESCRIPTION

TRAVEL : −5° to 95° adjustable
RATIO : 37 : 1
TURNS TO CLOSE : 9.25
WEIGHT : 4 kg. (8.8 Lb.) excl.handwheel

MOUNTINGHOLES

BOLT CIRCLE : min. ø50 [1.97]
(OFF CENTER) max. ø102 [4.02]
acc. ISO 5211 : F05−F07−F10
BORE : min.10.4[0.41] max.ø30[1.18] #24[0.94]

TORQUE

max.OUTPUT : 330 Nm (2921 lbf.in.)
max.INPUT : 28.5 Nm (252 lbf.in.)
M.A. : 11.6 ±15%

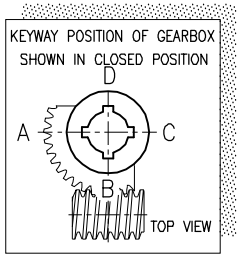

Dimensions in MM [inch]

rotork gears
Nijverheidstraat 25
7581 PV Losser
The Netherlands

GEARBOX AB 210 G

THIS DOCUMENT IS PROPERTY OF ROTORK GEARS, NEITHER THIS OR ITS CONTENT MAY BE COPIED OR USED IN ANY OTHER WAY DETRIMETAL TO THE INTEREST OF ROTORK GEARS, ACCEPTANCE OF THIS DOCUMENT SHALL CONSTITUTE ACKNOWLEDGEMENT OF THE FOREGOING CONDITIONS

Drawn : J.H Date : 07-03-02
Dwg Nr.: D02G-001 Rev.: 08

Contents Subject to change without notice.