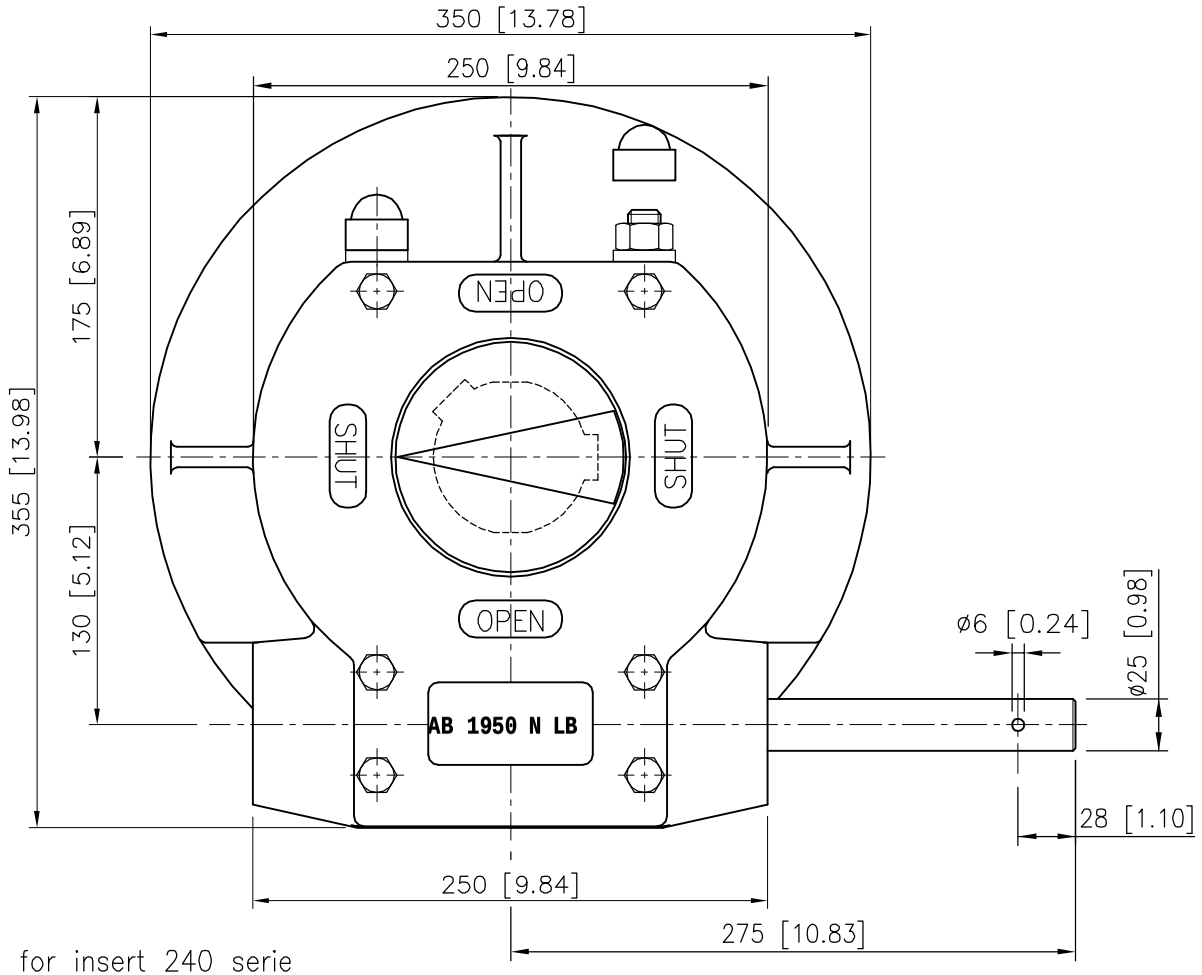

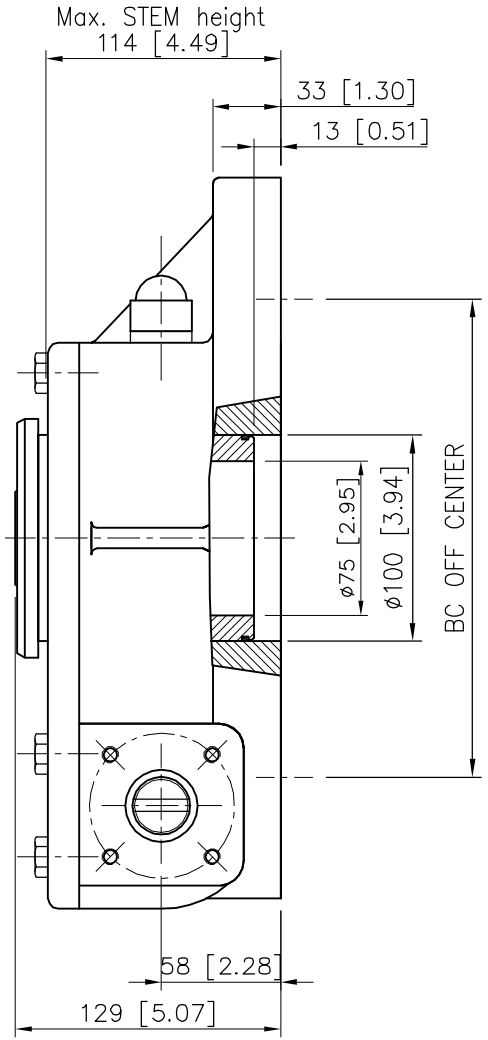

Suitable for insert 240 serie

DESCRIPTION

TRAVEL : −5° to 95° adjustable
RATIO : 52 : 1
TURNS TO CLOSE : 13
WEIGHT : 44.7kg. (98.5Lb)excl.handwheel

MOUNTINGHOLES

BOLT CIRCLE : min. ø125 [4.92]
(OFF CENTER) max. ø298 [11.73]
acc. ISO 5211 : F12−F14−F16−F25−F30
BORE : min.16[0.63] max.ø55[2.05] #46[1.81]

TORQUE

max.OUTPUT : 5500 Nm (48679 lbf.in.)
max.INPUT : 289 Nm (2562 lbf.in.)
M.A. : 19 ±15%

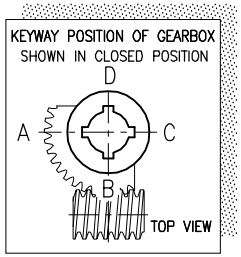

Dimensions in MM [inch]

rotork gears
Nijverheidstraat 25
7581 PV Losser
The Netherlands

GEARBOX AB 1950N LB

THIS DOCUMENT IS PROPERTY OF ROTORK GEARS, NEITHER THIS OR ITS CONTENT MAY BE COPIED OR USED IN ANY OTHER WAY DETRIMETAL TO THE INTEREST OF ROTORK GEARS, ACCEPTANCE OF THIS DOCUMENT SHALL CONSTITUTE ACKNOWLEDGEMENT OF THE FOREGOING CONDITIONS

Drawn : N.M Date : 08-12-08
Dwg Nr.: D06NILB-001 Rev.: 01

Contents Subject to change without notice.