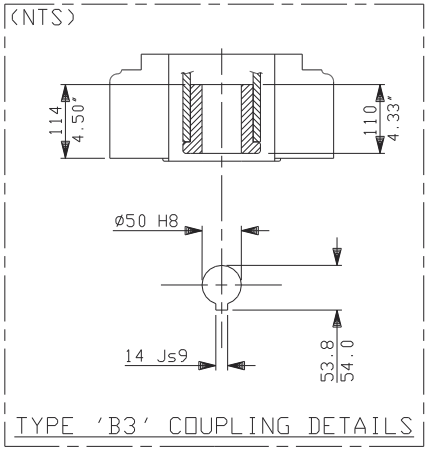


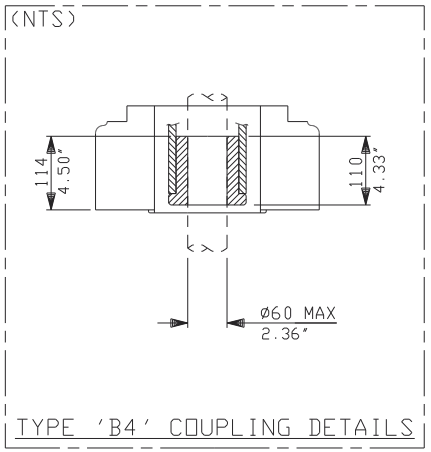


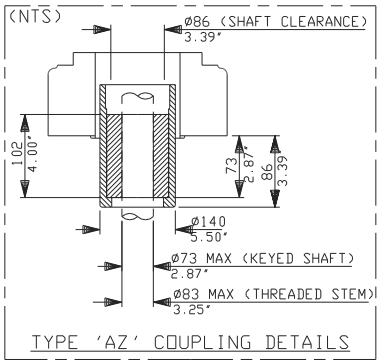


## 91A NON-THRUST BASES

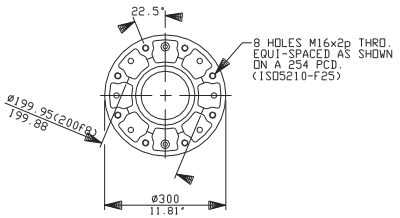


F25 BASE DETAILS

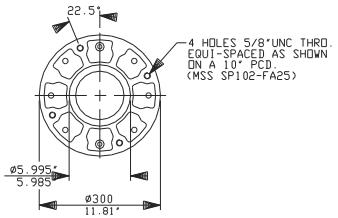


FA25 BASE DETAILS

## 95A THRUST BASES

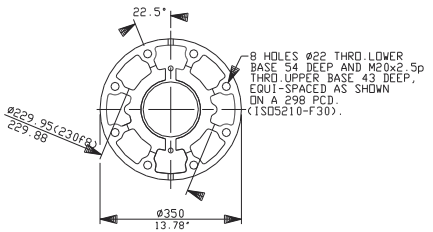


F30 BASE DETAILS

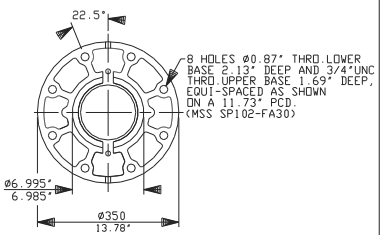


FA30 BASE DETAILS

rotork Rotork Controls Ltd.
Bath,England BA1 3JQ
Bath (01225)733200

91-95A BASE + COUPS

Date 141097

A3

A9195BC