NO	PART NAME	MATERIAL	Q'TY	REMARK
1	WINDOW	PC	1	
2	TOP COVER	AC4C	1	
3	BODY	AC2B	1	
4	LEVER	SM45C	1	
5	HANDLE	AC2B	1	
6	BASE	GC25	1	
7	BUSHING	SM45C	1	
8	LCU HOUSING	ADC12	1	

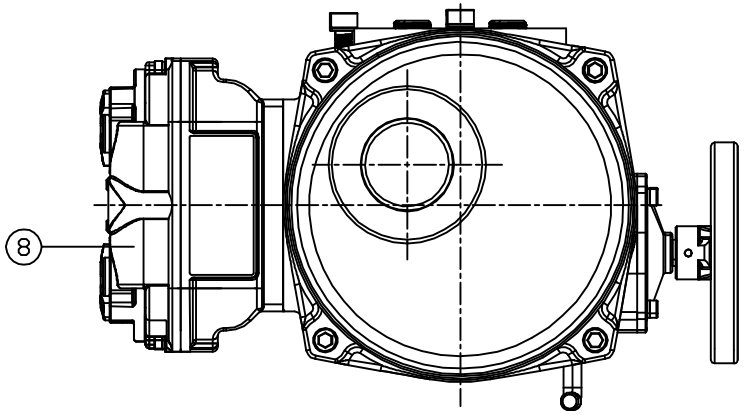

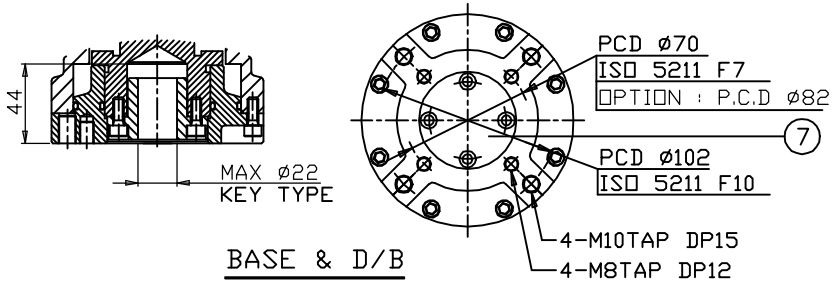

BASE & D/B

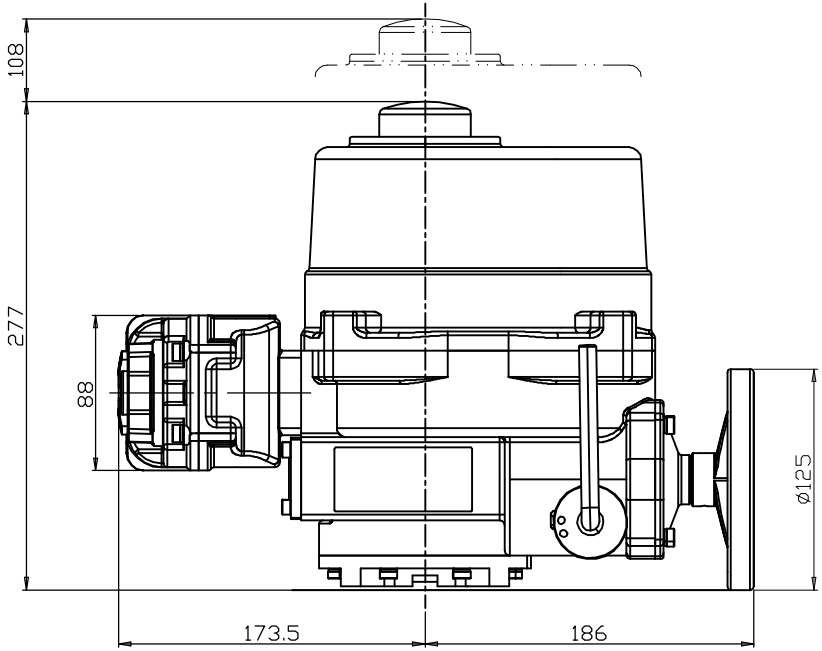

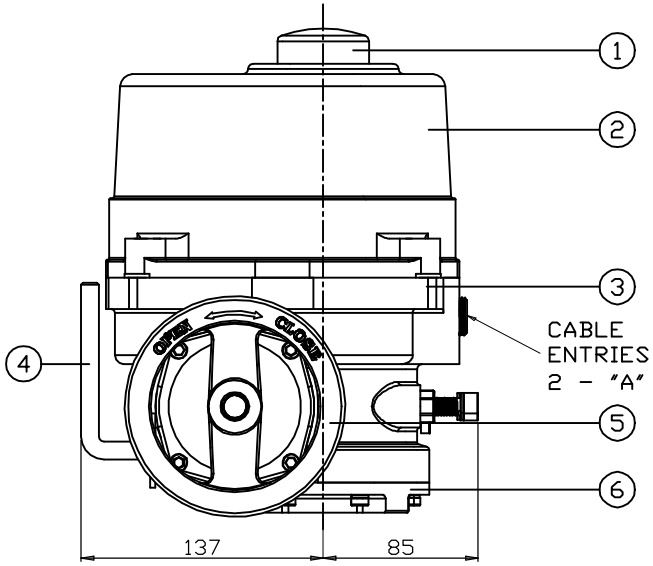

"A"
PF3/4
M20
NPT3/4

CABLE ENTRIES

NA019	1
NA015	1
APPLICATION	

PROJ.	SYM	E C N NO	CHANGES	DATE	SIGN	APPD
DRAW T.G KANG	SCALE 1/1	ISSU.DEPT. 연구소	PART NAME	NA015,019 ASS'Y		
	DIM. mm	DATE 12.09.18				
CHECK M.Y HWANG	NOAH		DWG NO.	A010-704-A		
APPD	NOAH ACTUATION CO., LTD		1 OF 1 SHEET	DWG SIZE A0		

1189×841