NO	PART NAME	MATERIAL	Q'TY	REMARK
1	WINDOW	강화유리	1	
2	TOP COVER	AC4C	1	
3	BODY	AC2B	1	
4	LEVER	SM45C	1	
5	HANDLE	AC2B	1	
6	BASE	GC25	1	
7	BUSHING	SM45C	1	
8	INTEGRAL HOUSING	ALDCS10	1	

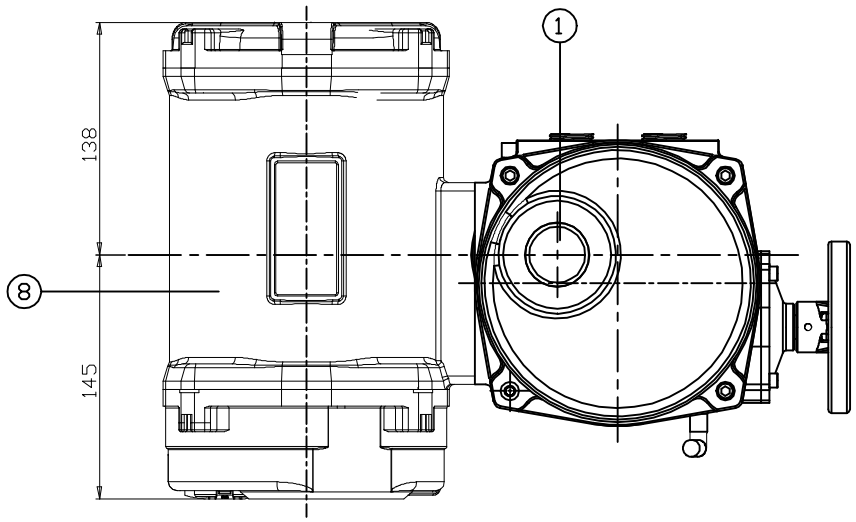

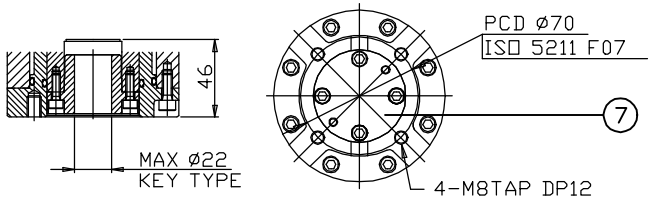

BASE & D/B

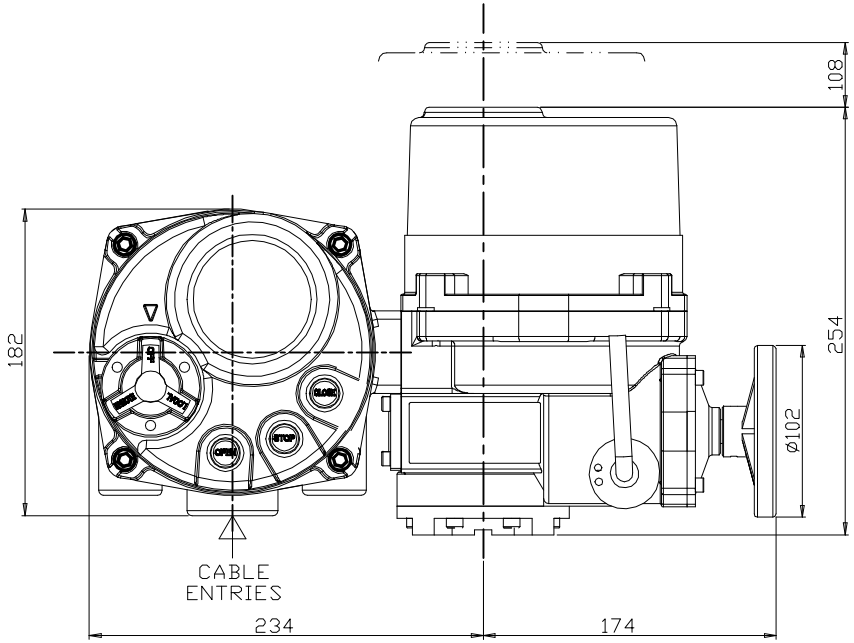

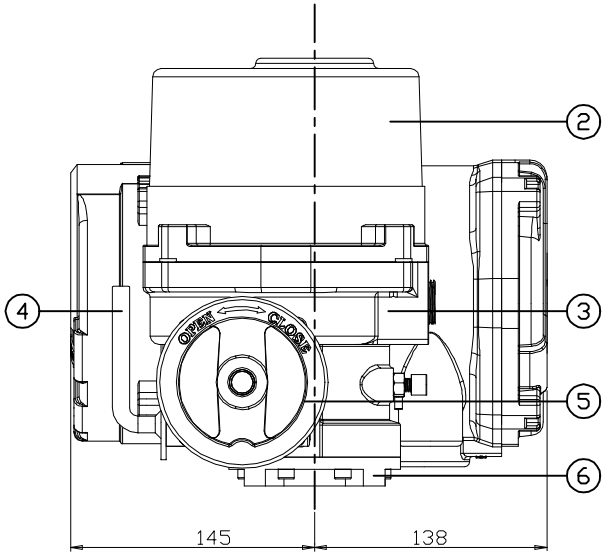

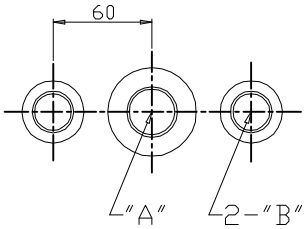

"A"	"B"
PF 1	PF3/4
M25	M20
NPT 1	NPT3/4

CABLE ENTRIES

NA009	1
NA006	1
APPLICATION	

PROJ.	SYM	E C N NO	CHANGES	DATE	SIGN / APPD
DRAW T.G KANG	SCALE 1/1	ISSU.DEPT. 연구소	PART NAME NA006,009 EXP ASS'Y		
	DIM. mm	DATE 12.09.19			
CHECK M.Y HWANG	Noah		DWG NO. A005-606-A		
APPD	EUNHA MACHINERY IND. CO., LTD.		1 OF 1 SHEET	DWG SIZE A0	

1189×841